LONDON TRANSPORT

ROUTEMASTER BUS

RM 857

Pack 01

BUILD INSTRUCTIONS

AGORA MODELS

STAGE 01

RADIATOR GRILLE AND BONNET ASSEMBLY

Assemble the first two sections of your Routemaster: the radiator grille with front number plate and the bonnet with hinged access panel.

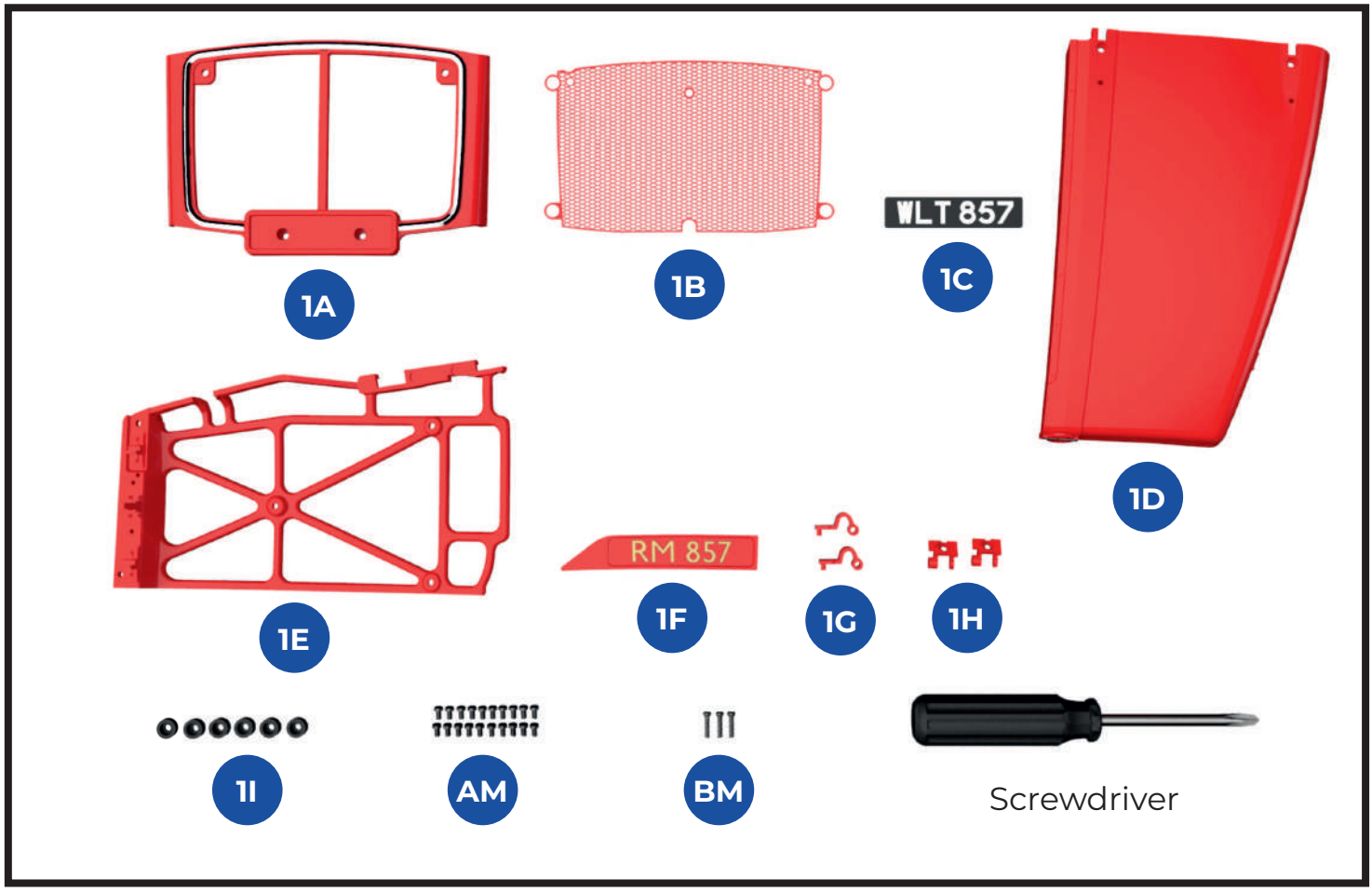

KEY TO PARTS SUPPLIED

1A Grille frame
1B Grille
1C Licence plate
1D Bonnet
1E Bonnet brace
1F Access panel
1G Hinge (x2)
1H Hinge seat (x2)
1I Bush (x6, includes a spare)
AM M1.7 x3mm (x20, includes 4 spares)
BM M1.7 x7mm (x3)

We have also supplied a screwdriver (suitable for use with the screws supplied with this model

Make sure you have identified all the parts correctly. If you are not using them straight away, it is a good idea to store them in clearly labelled small resealable plastic bags.

1

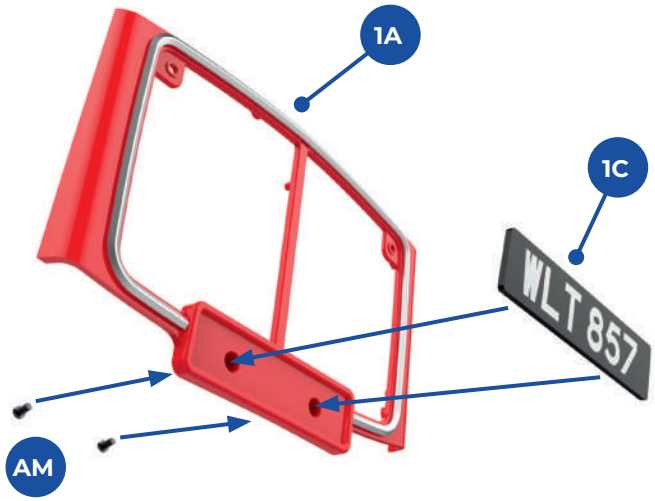

1 Take the front registration plate (**1C**) and locate the pegs on the back of it into the holes at the bottom of the front of the radiator grille frame (**1A**). Screw in place from the inside of the frame, using two **AM** screws.

2

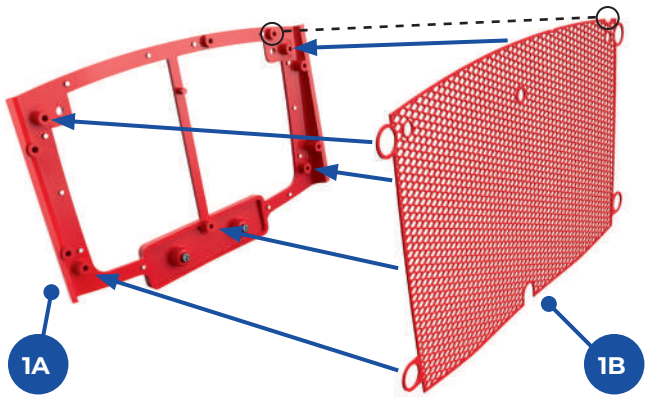

2 Position the radiator grille (**1B**) on the back of the frame (**1A**), ensuring that the holes and recesses in the edge of the grille fit over the raised screw sockets on the back of the frame. TAKE CARE! The grille is not reversible – position the indent in the upper edge of the grille below the socket on the frame (see dotted line).

3

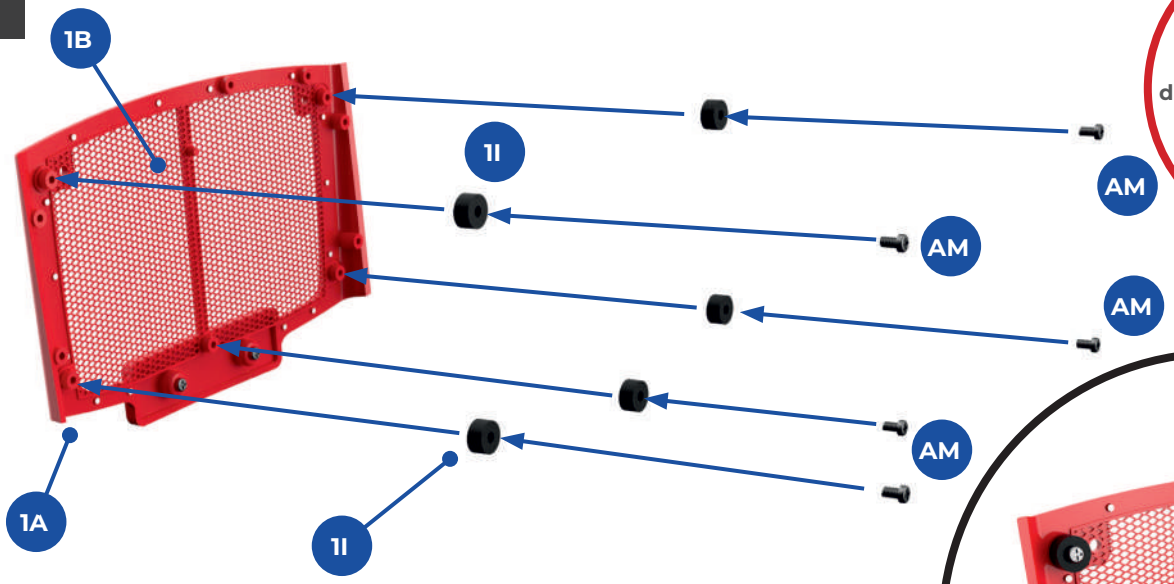

If the screw holes have become clogged with paint during manufacture, you can clear them with a fine modelling file or similar.

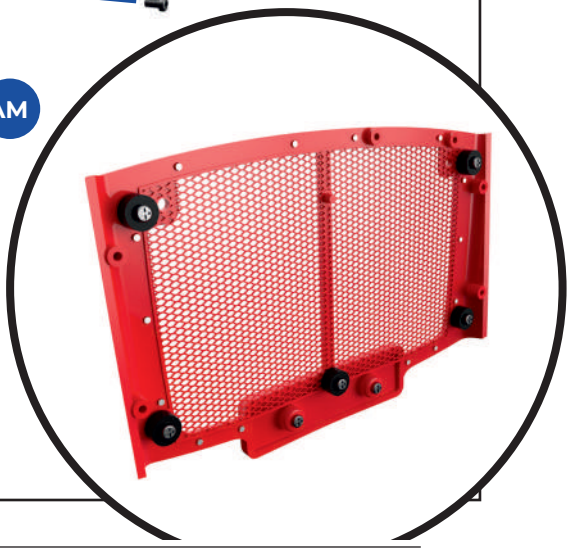

3 With the grille in position, at each fixing point take a bush (**1I**) and pass an **AM** screw through it from the flat side before securing the screw in the socket. The bushes act as washers to hold the grille in place, forming caps over the raised sockets. Note that there are five fixing points altogether.

4

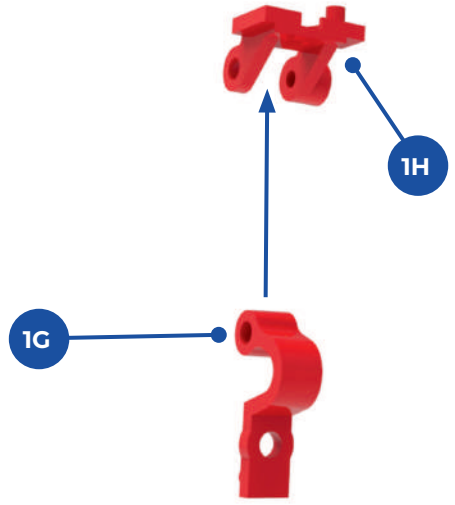

4 Assemble the hinge mechanism that allows the access panel (**1F**) to be opened and closed. Align the socket in one hinge (**1G**) between the sockets in the hinge seat (**1H**), as shown.

5

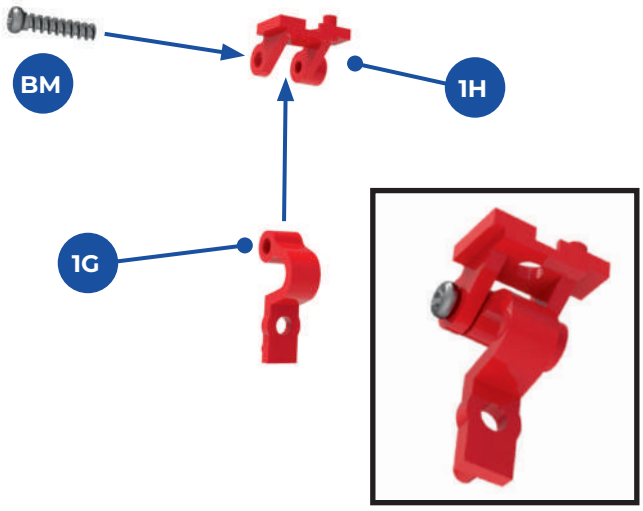

5 Insert one long screw (**BM**) through the screw holes in both items. NOTE: one socket on the hinge is narrower than the other; insert the screw through the thinner side first. Do not overtighten, the hinge needs to be able to move freely. Repeat for the second hinge.

6

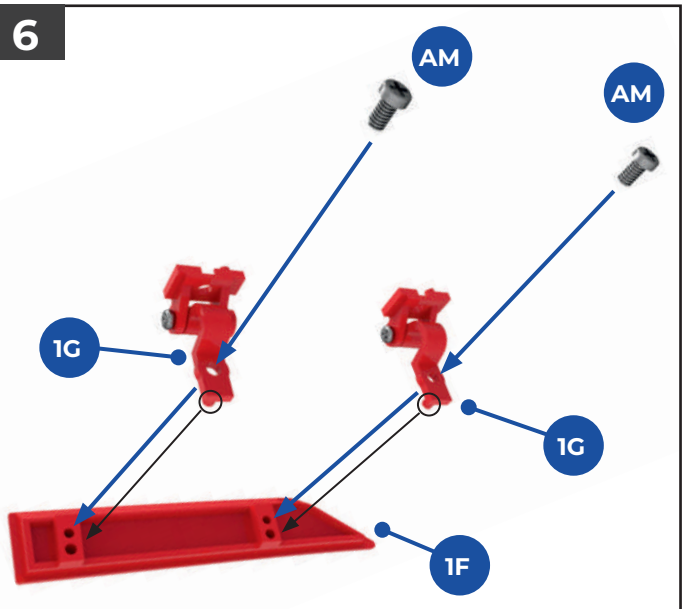

6 Use the peg (circled) on each hinge mechanism as a guide to position the hinges (**1G**) on the inside of the access cover (**1F**). Fit the pegs into the larger holes on the inside of the cover and secure with two **AM** screws, taking care not to overtighten and cause damage.

7

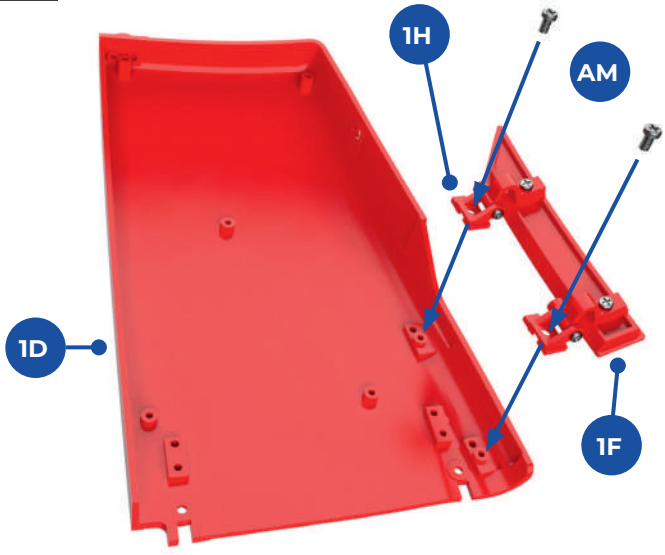

7 On the inside of the bonnet (**1D**), fix the hinges (**1H**) to the holes indicated, using two **AM** screws. Check that the access panel opens and closes smoothly and loosen or tighten the long hinge screw fitted in step 5 if necessary.

8

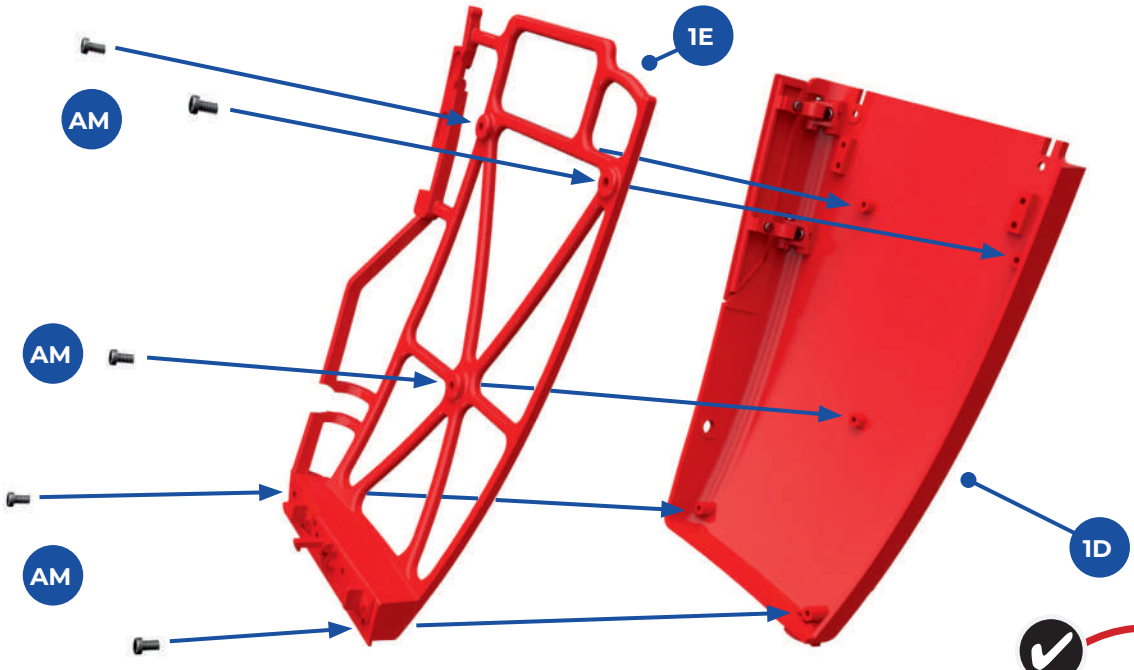

8 Working from the inside of the bonnet, take the bonnet brace (**1E**) and check that it fits neatly into the bonnet (**1D**). Using five **AM** screws, fix the brace in place at the positions shown.

Spare screws should be stored in clearly labelled resealable bags in case you need them at a later stage.

Viewed from the outside, the access panel fits flush against the side of the bonnet.

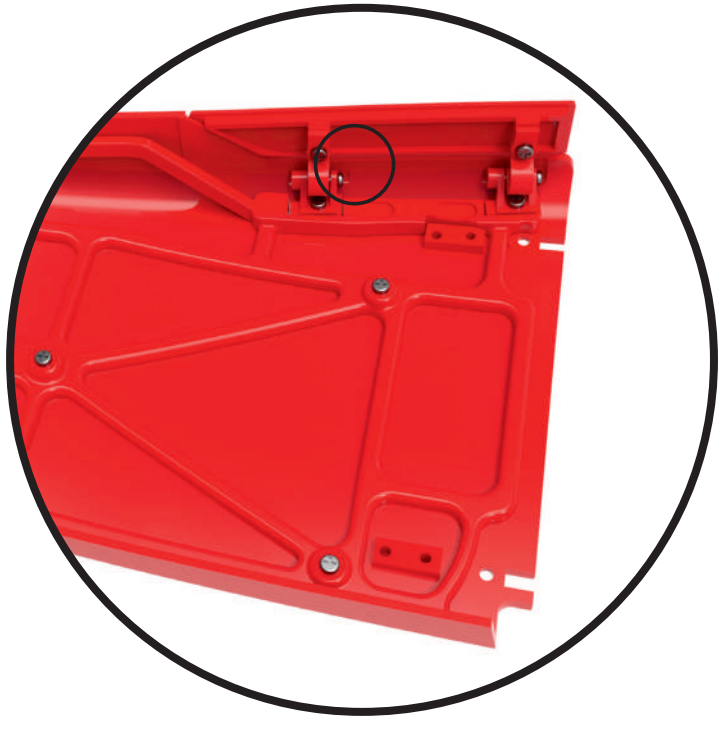

On the inside of the bonnet, the brace is screwed firmly in place and fits around the access panel hinges.

Assembly guide

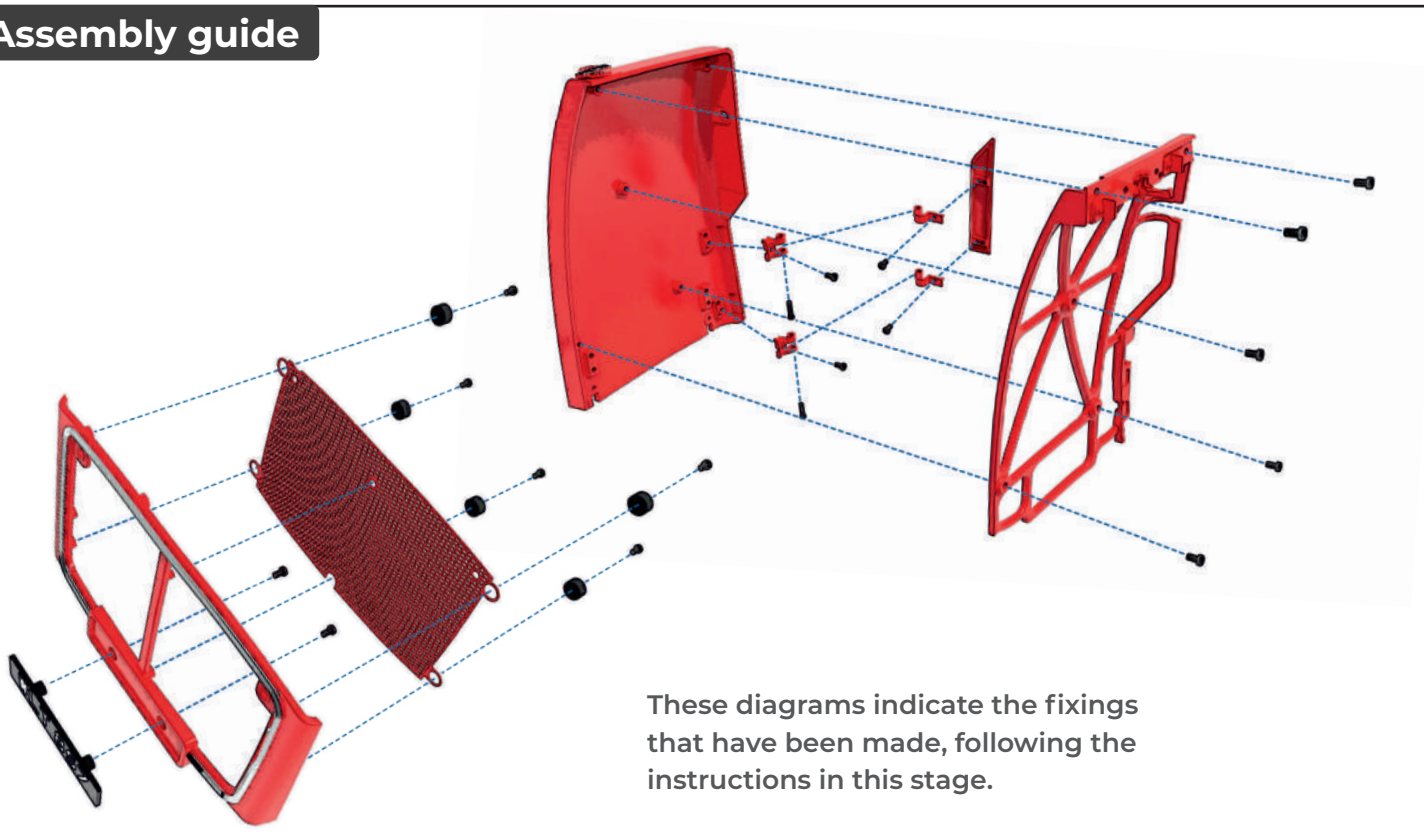

These diagrams indicate the fixings that have been made, following the instructions in this stage.

Finished view

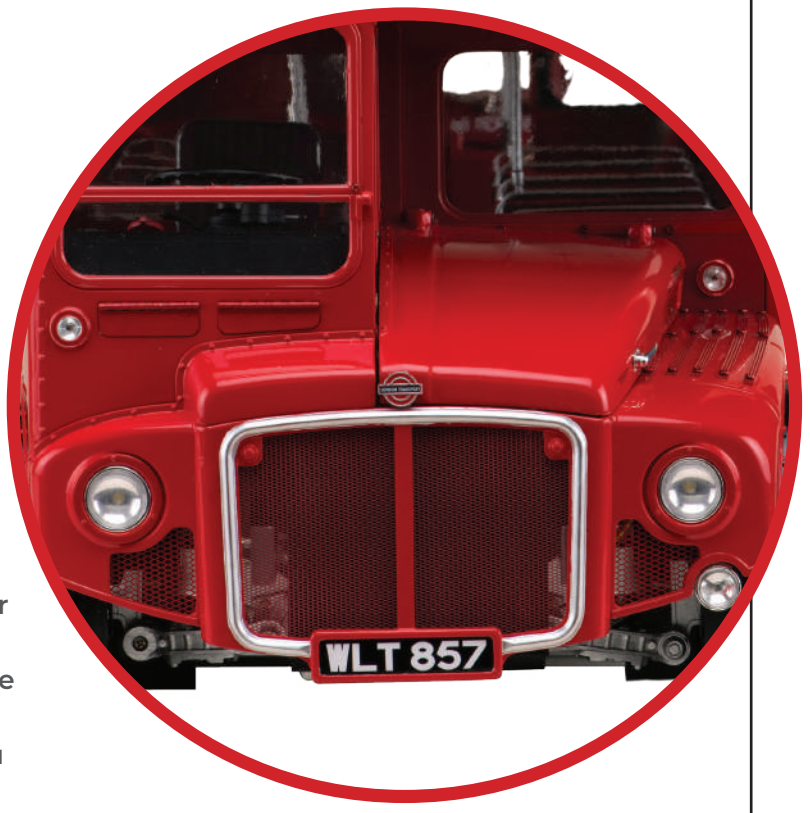

You have now completed two important parts for your Routemaster build: the bonnet panel with fleet number on the hinged access panel, and the radiator grille and registration plate. The bonnet will eventually rest on the top of the grille, as you can see in the detail of the model on the right.

STAGE 02

OFFSIDE AND NEARSIDE HEADLIGHT ASSEMBLY

In this stage you will find the offside and nearside wings. Follow the instructions to fit the headlights and join the wings to the radiator grille.

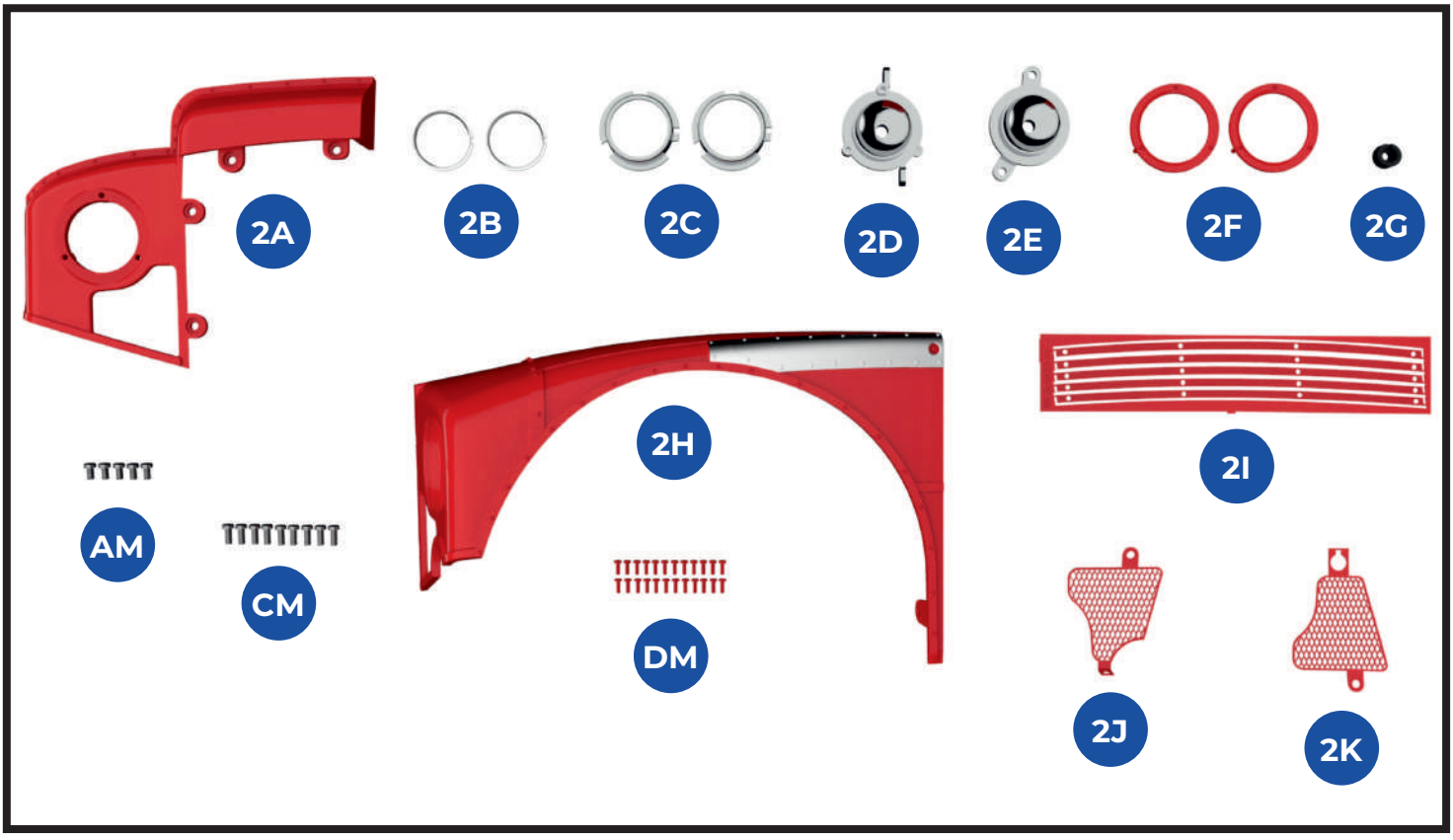

KEY TO PARTS SUPPLIED

2A Offside headlamp panel
2B Headlamp lens (x2)
2C Headlamp inner rim (x2)
2D Nearside headlamp reflector
2E Offside headlamp reflector
2F Headlamp outer rim (x2)
2G Offside grille washer
2H Front nearside wing
2I Wing protector trim
2J Nearside grille
2K Offside grille
AM 1.7 x 3mm (x5 includes a spare)
CM 1.7 x 4mm (x9 includes a spare)
DM 1.0 x 3mm (x24 includes four spares)

When working on your model, as well as an uncluttered working surface you will need a storage area for the parts you have assembled. It is a good idea to collect old shoe boxes or large sandwich containers where you can store everything, using tissue paper or bubble wrap to protect them.

1

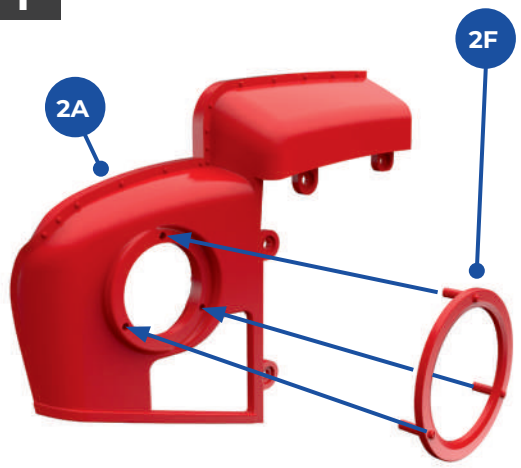

1 Take the offside headlamp panel (**2A**) and one of the headlamp outer rims (**2F**). Position the rim in the recess on the outside of the panel, locating the pegs on the rim in the sockets as indicated. The outer rim is held firmly without the need for further fixing.

2

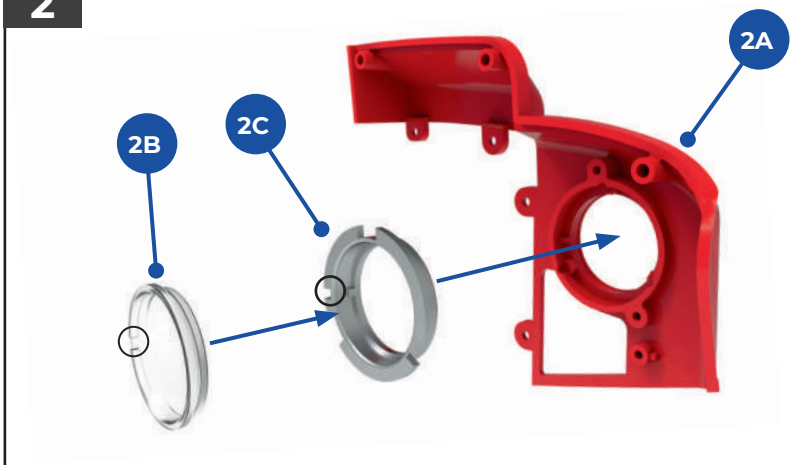

2 Take one of the headlamp lenses (**2B**) and fit it onto one of the inner rims (**2C**), aligning the recess and notch (circled). The narrower side of the lens fits into the lipped edge of the inner rim. Keeping the outer rim in place, from the inside fit the inner rim into the headlamp socket in the offside headlamp panel (**2A**).
NOTE: Position the lip of the inner rim as shown in relation to the wing panel, so that the notches align with the fittings on the inner edge of the headlamp socket.

3

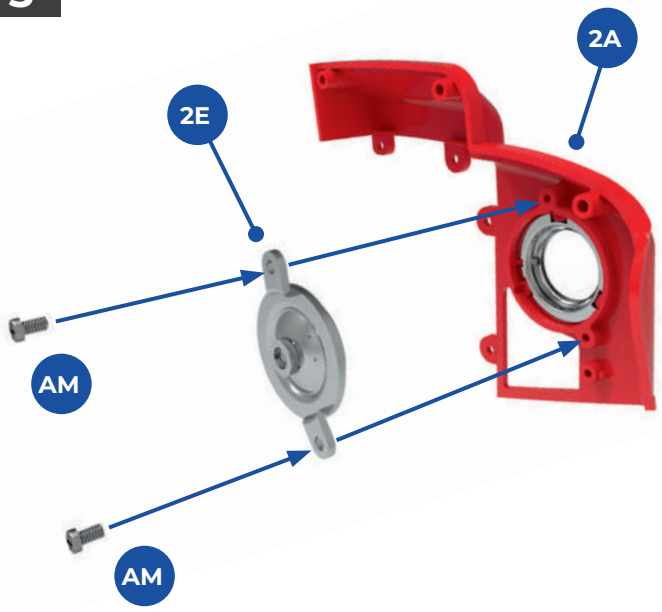

3 Take the offside headlamp reflector (**2E**) and fix it to the headlight socket in the panel (**2A**) using two **AM** screws. The lens and inner rim are now held in place.

4

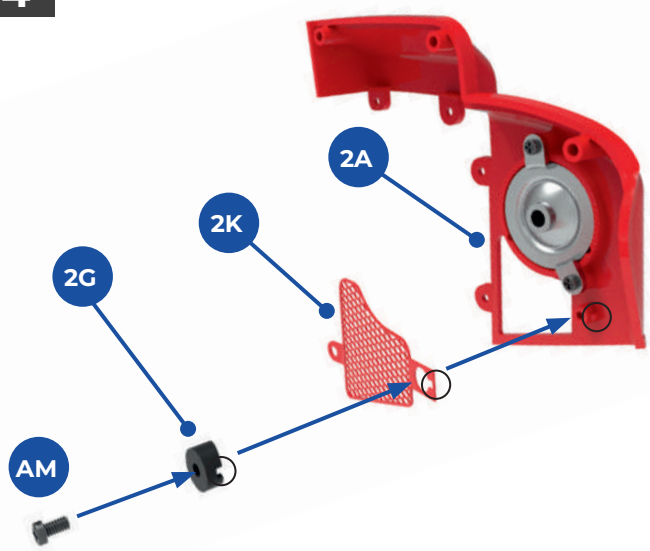

4 Take the offside grille (**2K**) and check the fit against the inside of the offside headlamp panel (**2A**). The hole in the square tab fits over the screw socket on the panel. Use a bush (**2G**) to hold the square tab in place, aligning the notches (circled) and fixing it with an **AM** screw. (The rounded tab will be fixed in place in step 7.)

5

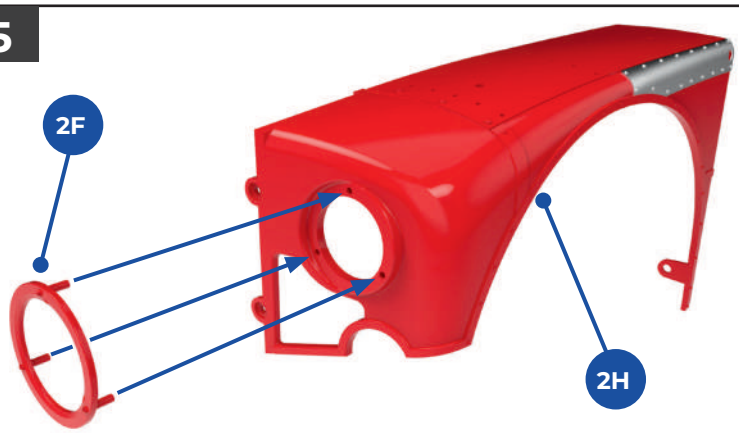

5 The nearside headlamp is assembled and attached in a similar way to the offside headlamp. First, fit the outer rim (**2F**) to the front nearside wing (**2H**).

a Working from the inside, fit the lens (**2B**) and inner rim (**2C**) as described in Step 2.

b Fit the nearside headlamp reflector (**2D**). NOTE: the screw fittings on the nearside are at a different angle to those on the offside. Fix in place with two **CM** screws.

C Finally, fit the nearside grille (**2J**). Again, the fixings are different on this side. Fix in place with one **AM** screw.

a

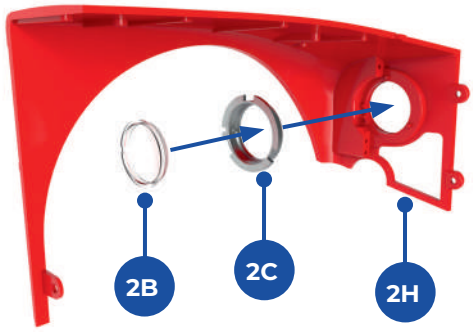

b

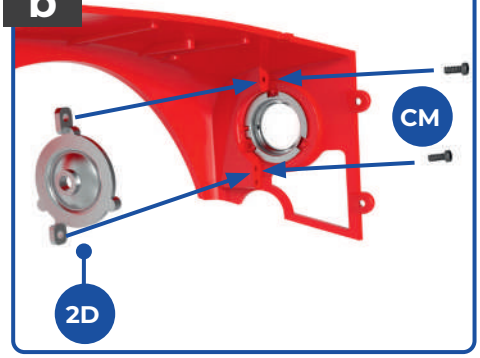

c

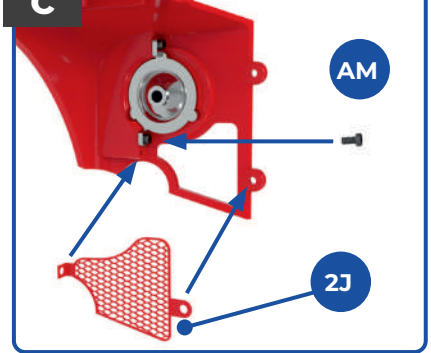

6

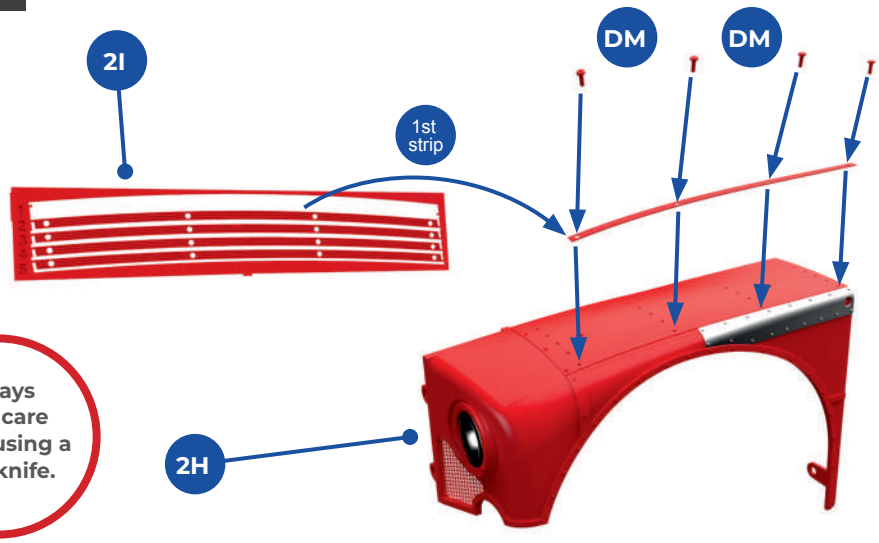

a

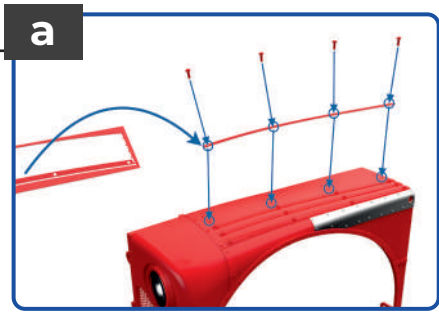

! Always take care when using a craft knife.

6 Using a craft knife, and working on a suitable surface (a cutting mat, kitchen chopping board or similar) remove the first wing protector strip from the fret (**2I**). Be careful not to bend it. Position the protector strip along the outer edge of the nearside front wing (**2H**) so that the holes are aligned and the 'non slip' side of the trim is uppermost. Fix in place with four **DM** screws.

a Continue in the same way to fit the remaining four strips in place.

7

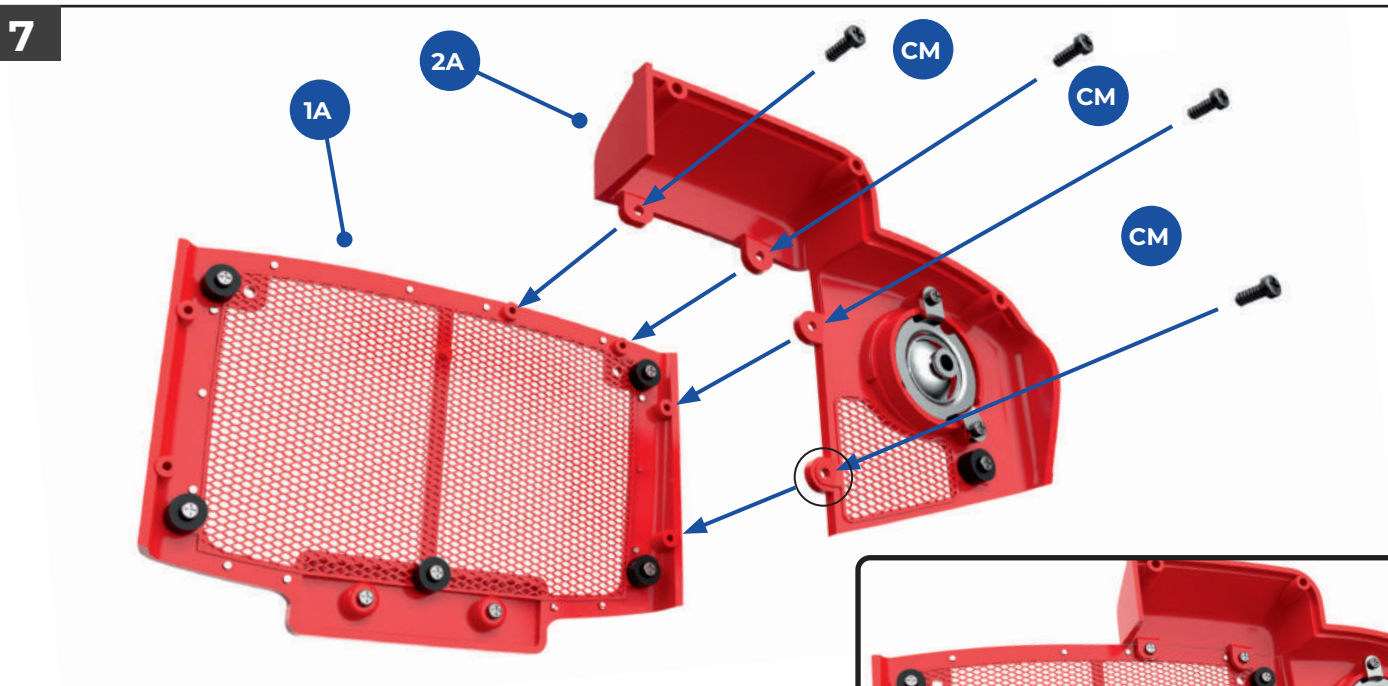

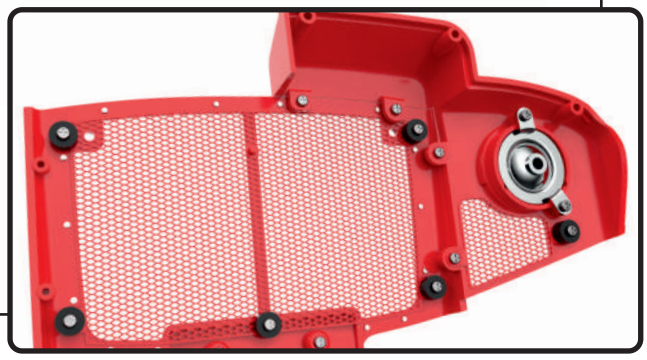

7 Fit the offside headlamp panel (**2A**) to the radiator grille frame (**1A**) , assembled in the previous stage, using four **CM** screws. NOTE: the lowest screw on the right goes through the radiator grille panel tab to hold it in place (circled).

8

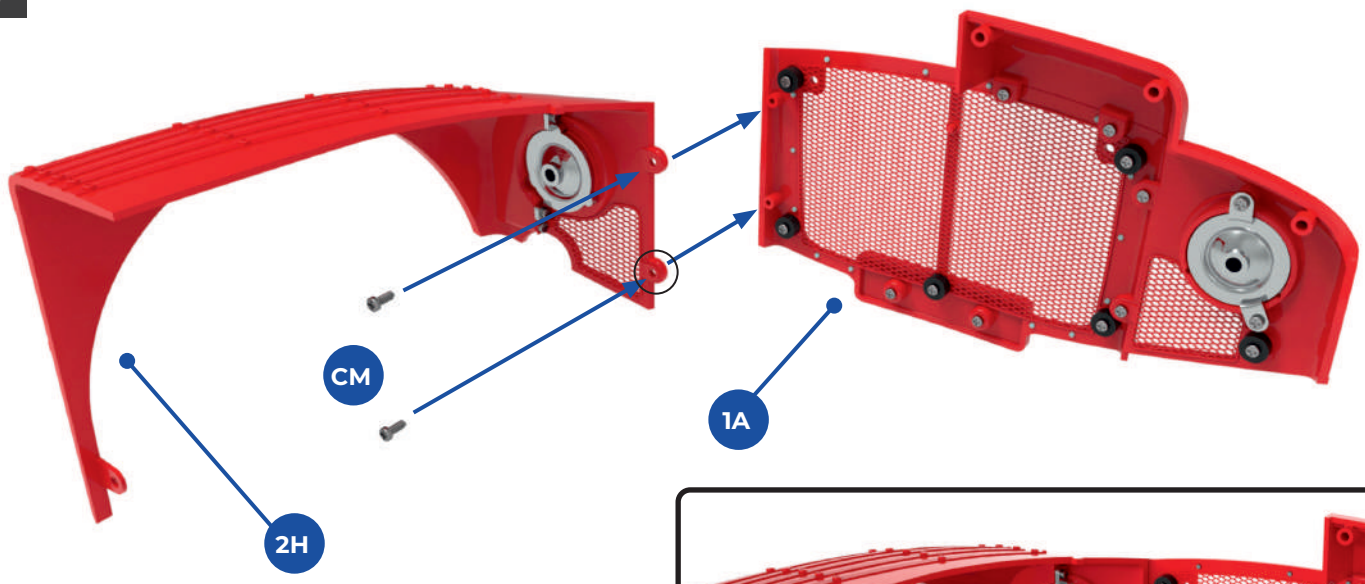

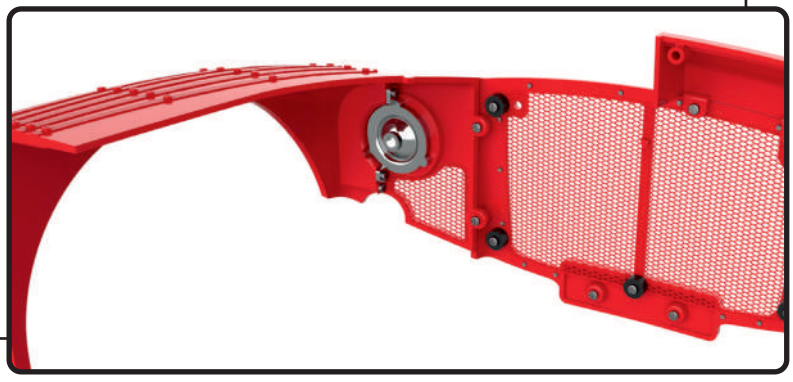

8 Fit the front nearside wing (**2H**) to the radiator grille frame using two **CM** screws – this will also fix the rounded tab on the nearside grille in place (circled). TAKE CARE! Because of the shape of these parts when assembled, take particular care to avoid putting any strain on them when you store them.

Assembly guide

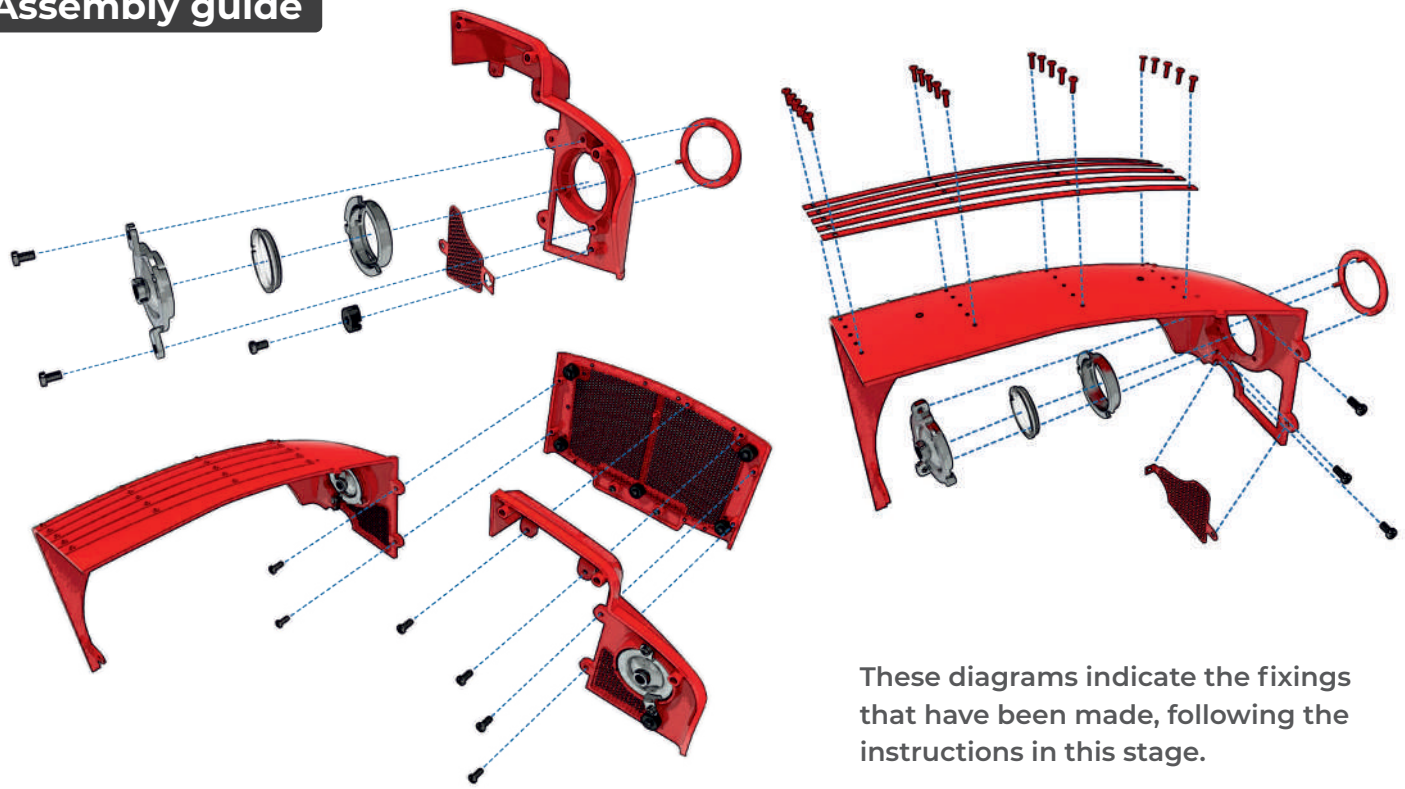

These diagrams indicate the fixings that have been made, following the instructions in this stage.

Finished view

This completes the work for Stage 2 – the headlamps with vents beneath them, and the front nearside wing with strips of grip trim. Details of how to fit the electrics for the headlamps will be given in a future stage.

STAGE 03

LOWER PART OF THE STAIRCASE

The treads are fitted to the first four steps and the steps are joined together. A side panel is added to the outer edge of the steps to form the lower part of the staircase.

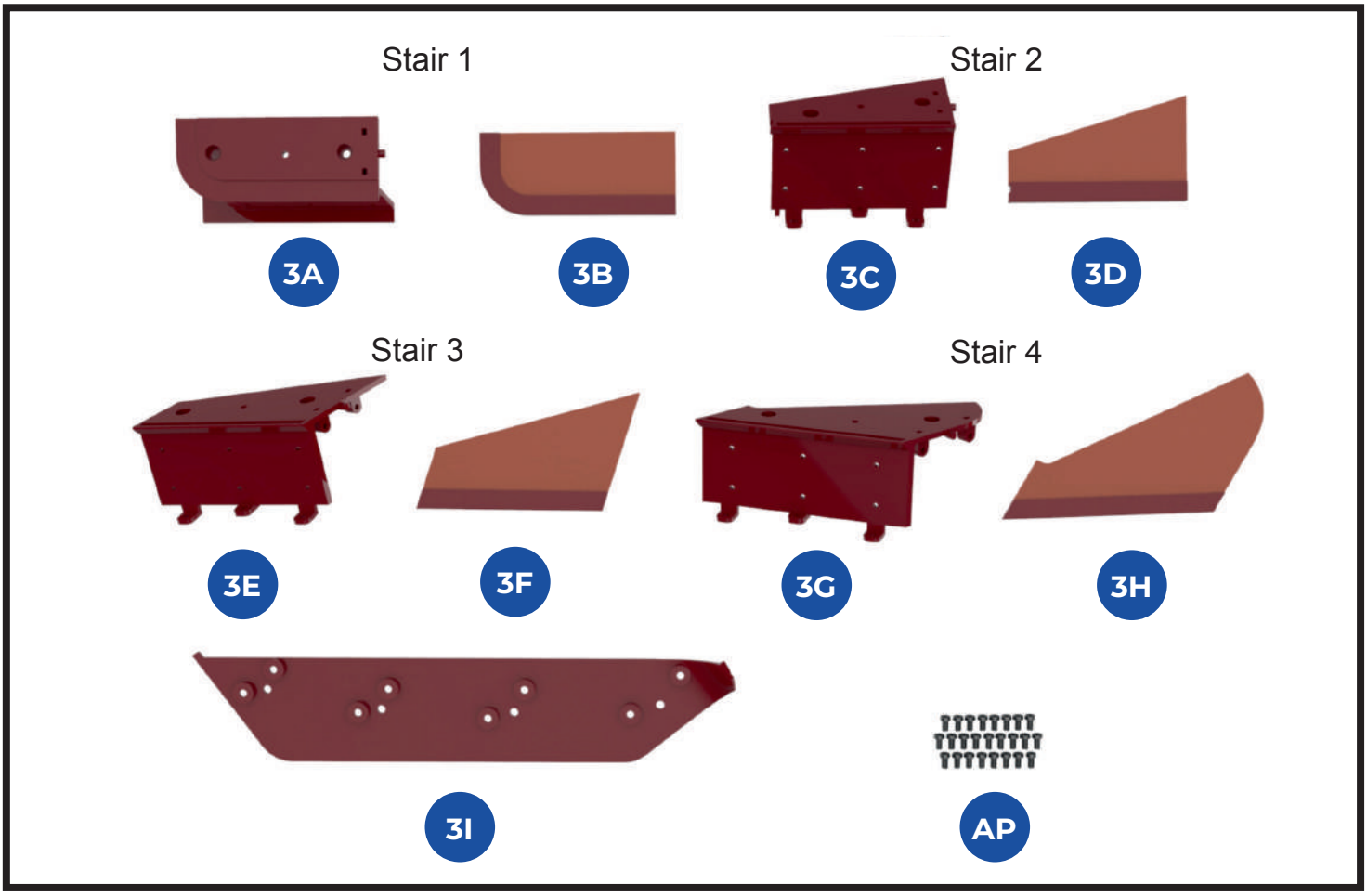

KEY TO PARTS SUPPLIED

3A Stair riser 1
3B Tread 1
3C Stair riser 2
3D Tread 2
3E Stair riser 3
3F Tread 3
3G Stair riser 4
3H Tread 4
3I Stair side panel
AP 1.7 x 3mm (x25, including three spares)

NOTE: AP screws are the same size as the AM screws in stages 1 and 2, but they have a self-tapping thread, to go into plastic. They are NOT interchangeable.

Check the stair sections to make sure that you have identified them correctly: stair riser 2 (3C) and tread 2 (3D) have straight sides; stair riser 3 (3E) and tread 3 (3F) have angled sides. The other pieces have curved edges that must match up. Lay the stair risers and treads out in the right order, ready for assembly.

1

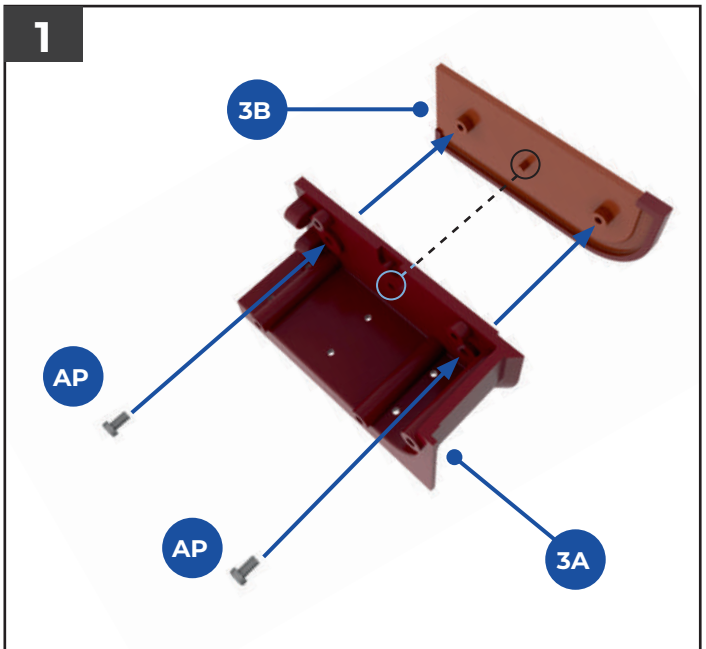

1 Fit tread 1 (**3B**) on the top of stair riser 1 (**3A**): the peg in the middle of the tread fits into the hole in the middle of the stair riser (see dotted line) and the screw sockets in the tread fit into the recesses in the top of the stair riser. Fix in place with two **AP** screws.

2

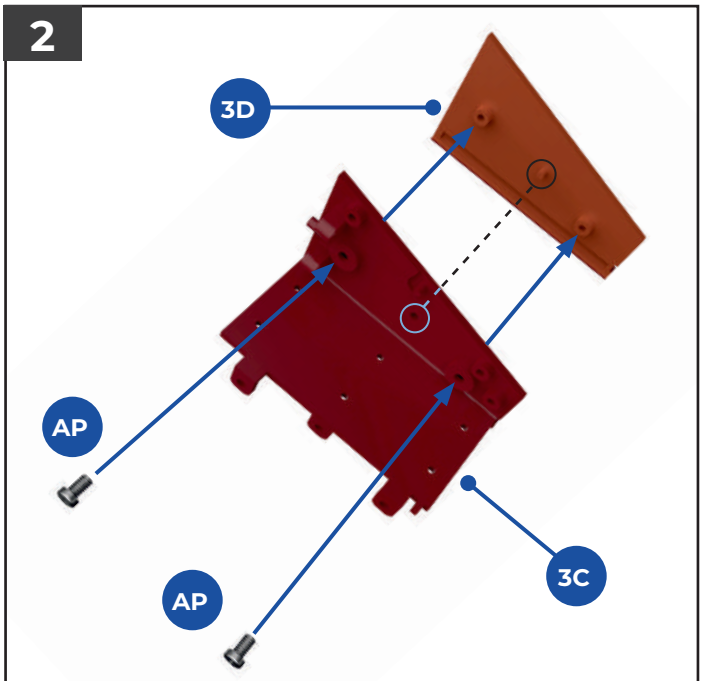

2 Assemble the second step, fitting tread 2 (**3D**) on the top of stair riser 2 (**3C**) with the pegs and sockets located in the same way as the first step. Fix in place with two **AP** screws.

3

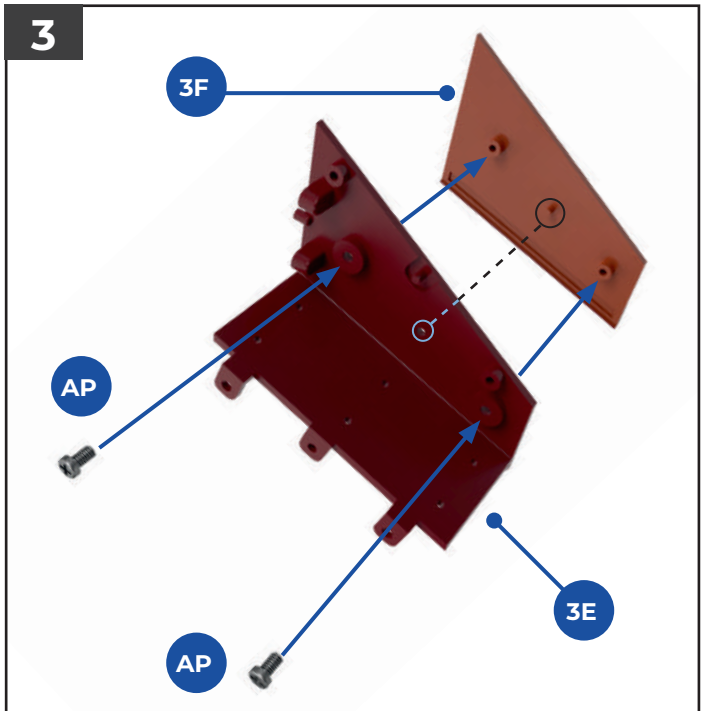

3 Assemble the third step in the same way, so that tread 3 (**3F**) fits on stair riser 3 (**3E**), fixing with two **AP** screws.

4

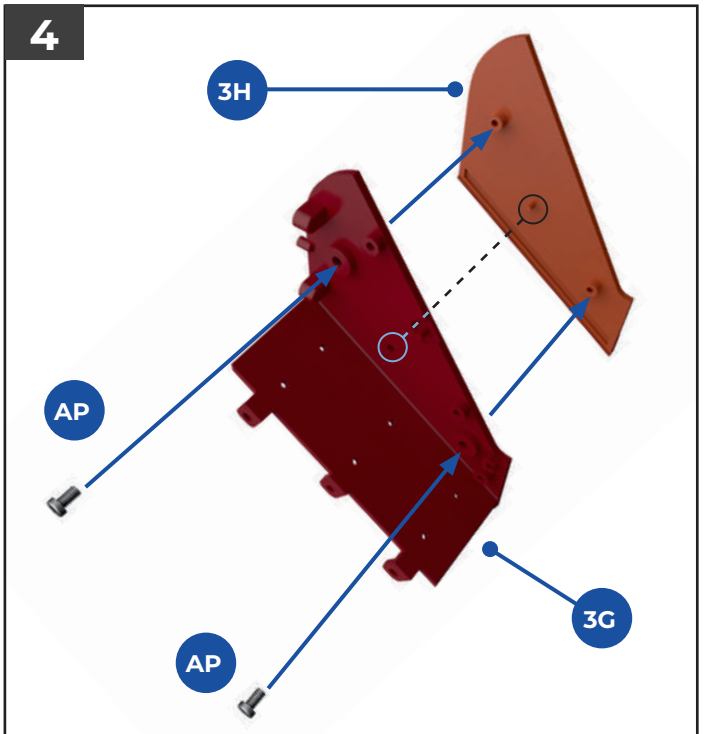

4 Assemble the fourth step in the same way, so that tread 4 (**3H**) fits on stair riser 4 (**3G**), fixing with two **AP** screws.

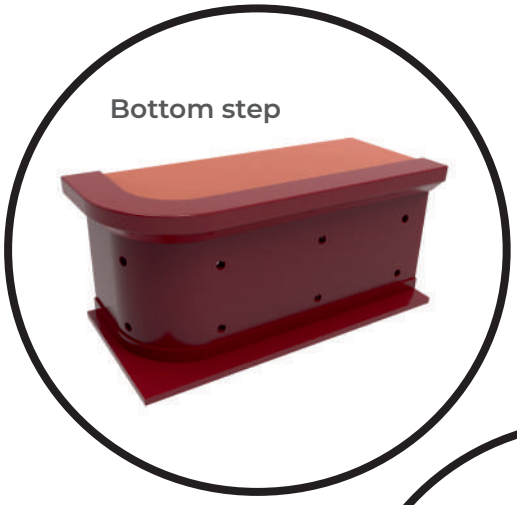

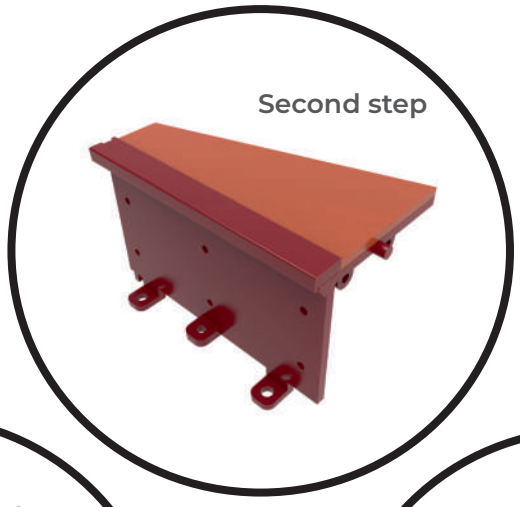

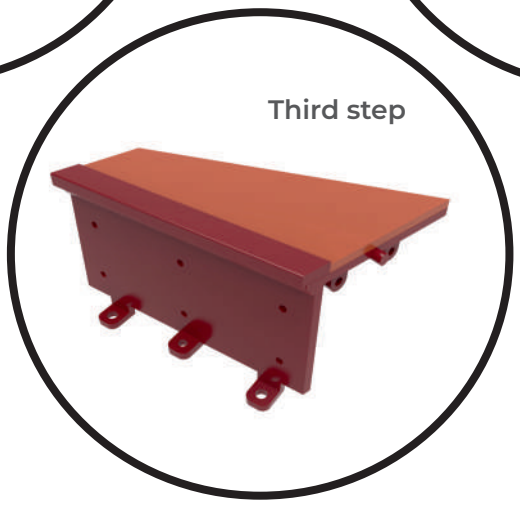

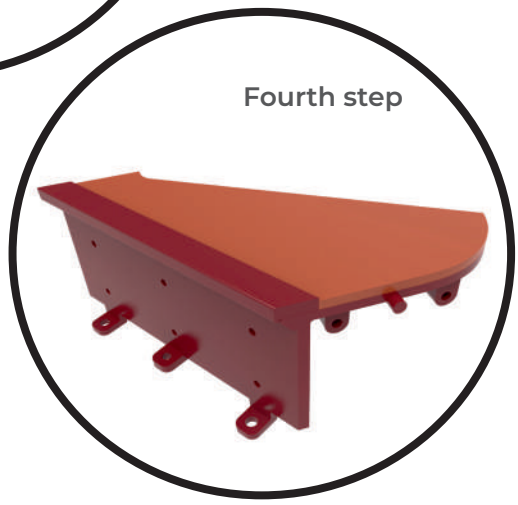

After fitting the treads to the stair risers, you now have four steps ready to join together to form the lower part of the staircase.

5

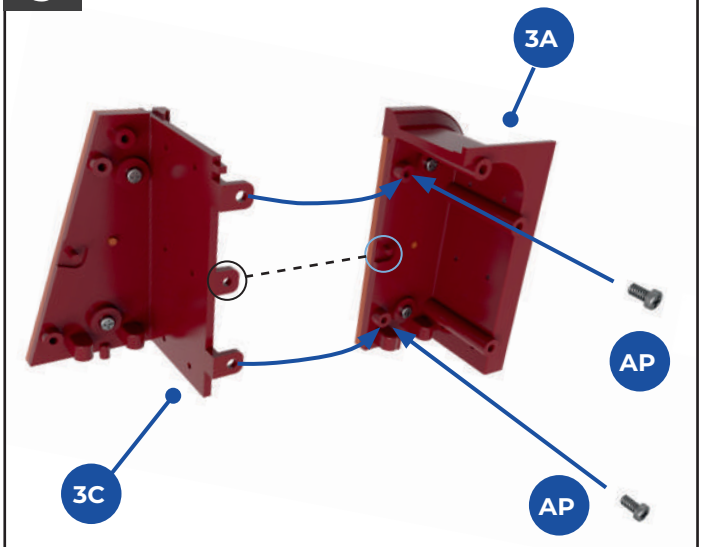

5 Fit the second step to the bottom step, positioning the tabs on stair riser 2 (**3C**) over the screw sockets on the underside of the tread of the bottom step (**3A**). The middle tab on part **3C** is located in the recess in part **3A**, so the peg in the recess goes through the hole in the tab (see dotted line). Fix the outer tabs in place with two **AP** screws.

6

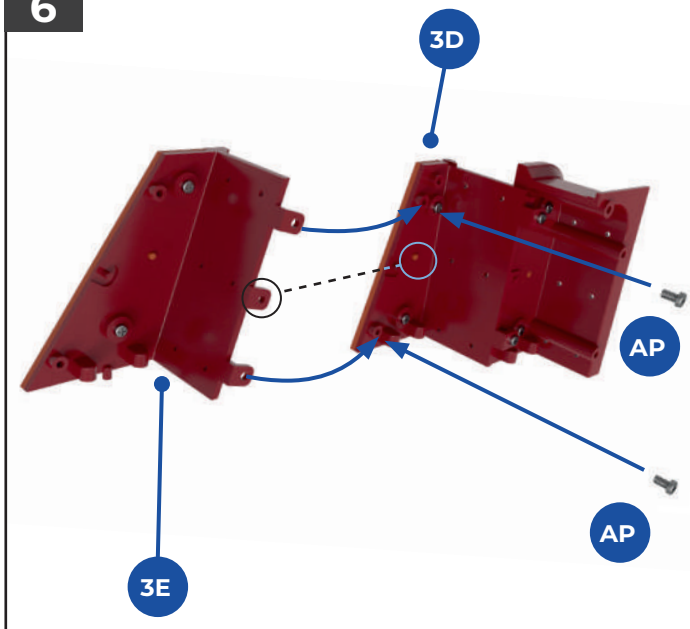

6 Join the third step to the second step in the same way, so that the tabs on stair riser 3 (**3E**) fit the sockets and recess on the underside of tread 2 (**3D**). Fix in place with two **AP** screws.

7

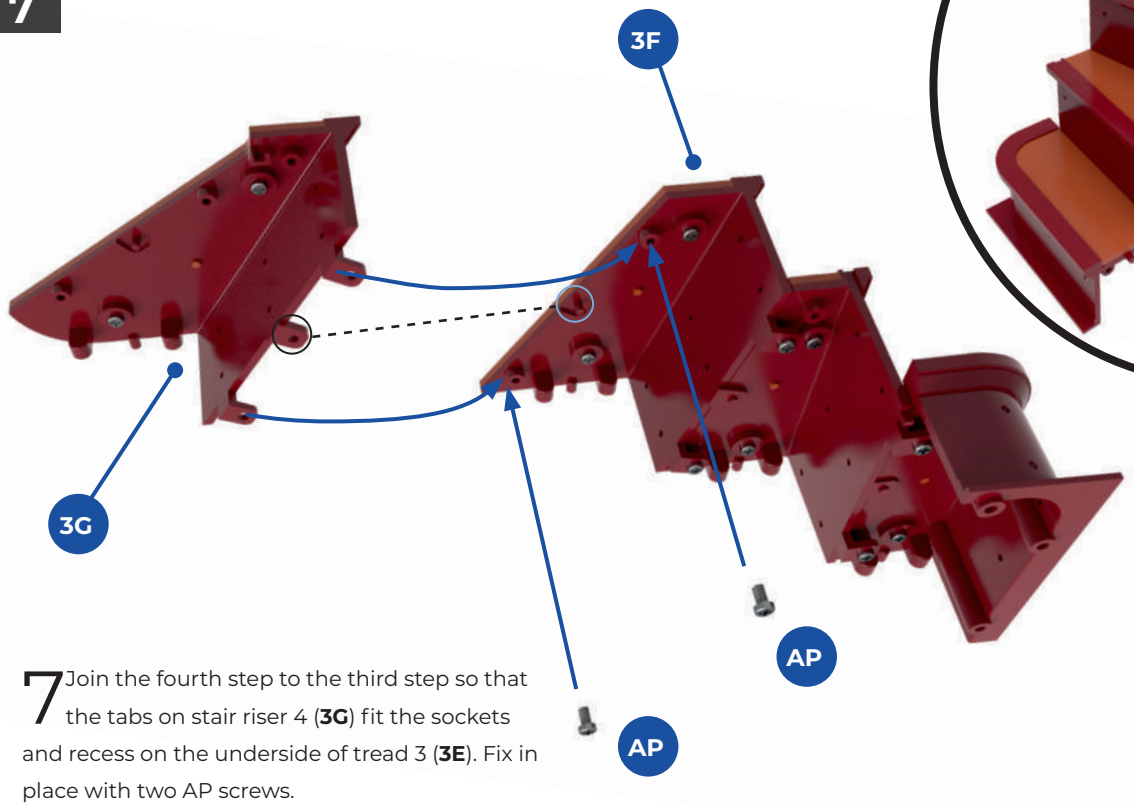

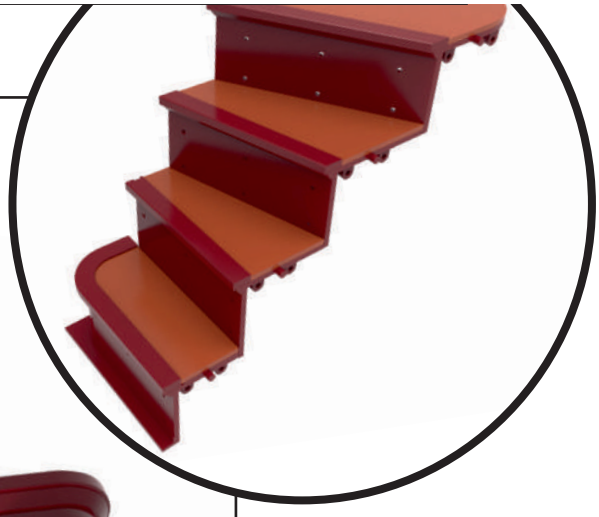

The four steps have now been joined together to form the lower part of the staircase.

7 Join the fourth step to the third step so that the tabs on stair riser 4 (**3G**) fit the sockets and recess on the underside of tread 3 (**3E**). Fix in place with two AP screws.

8

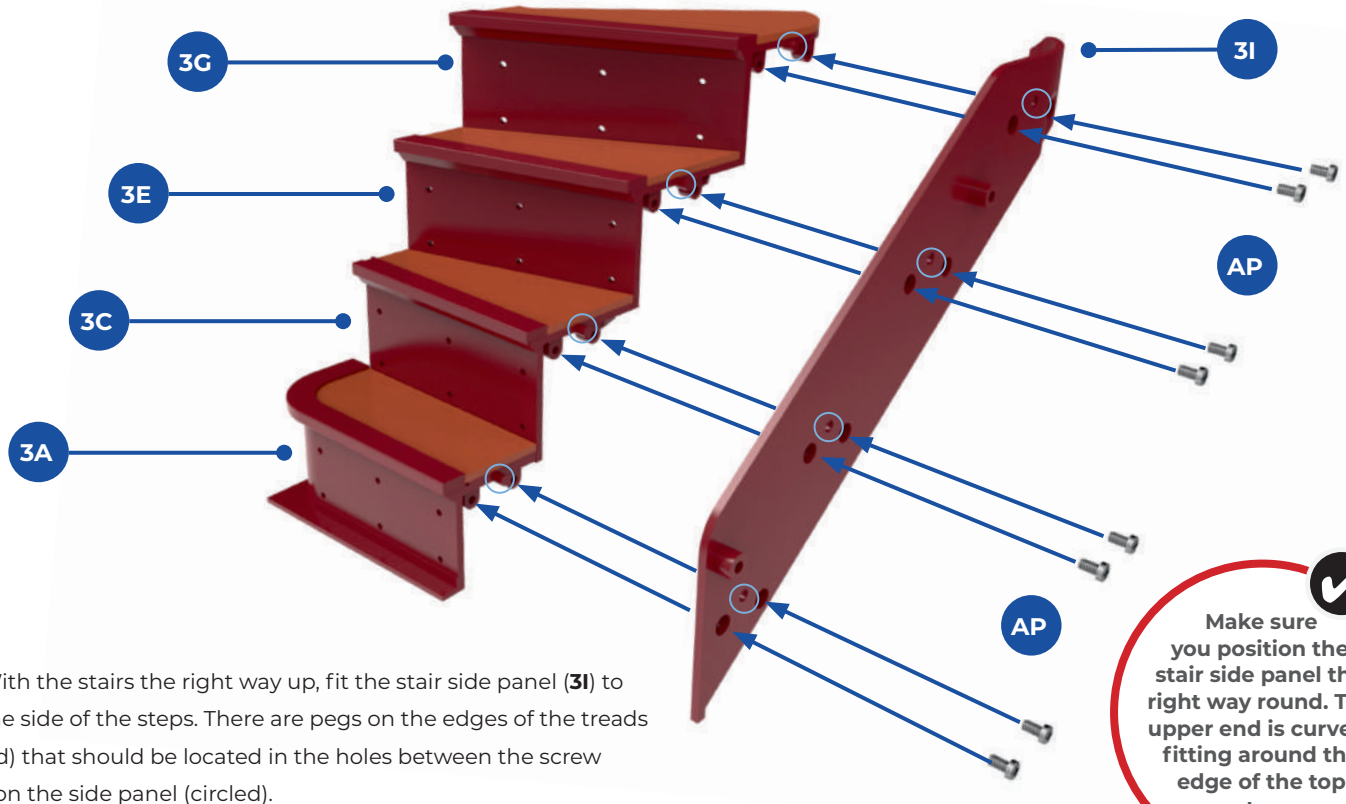

8 With the stairs the right way up, fit the stair side panel (**3I**) to the side of the steps. There are pegs on the edges of the treads (circled) that should be located in the holes between the screw holes on the side panel (circled).

Make sure you position the stair side panel the right way round. The upper end is curved, fitting around the edge of the top step.

Assembly guide

These diagrams indicate the fixings that have been made, following the instructions in this stage.

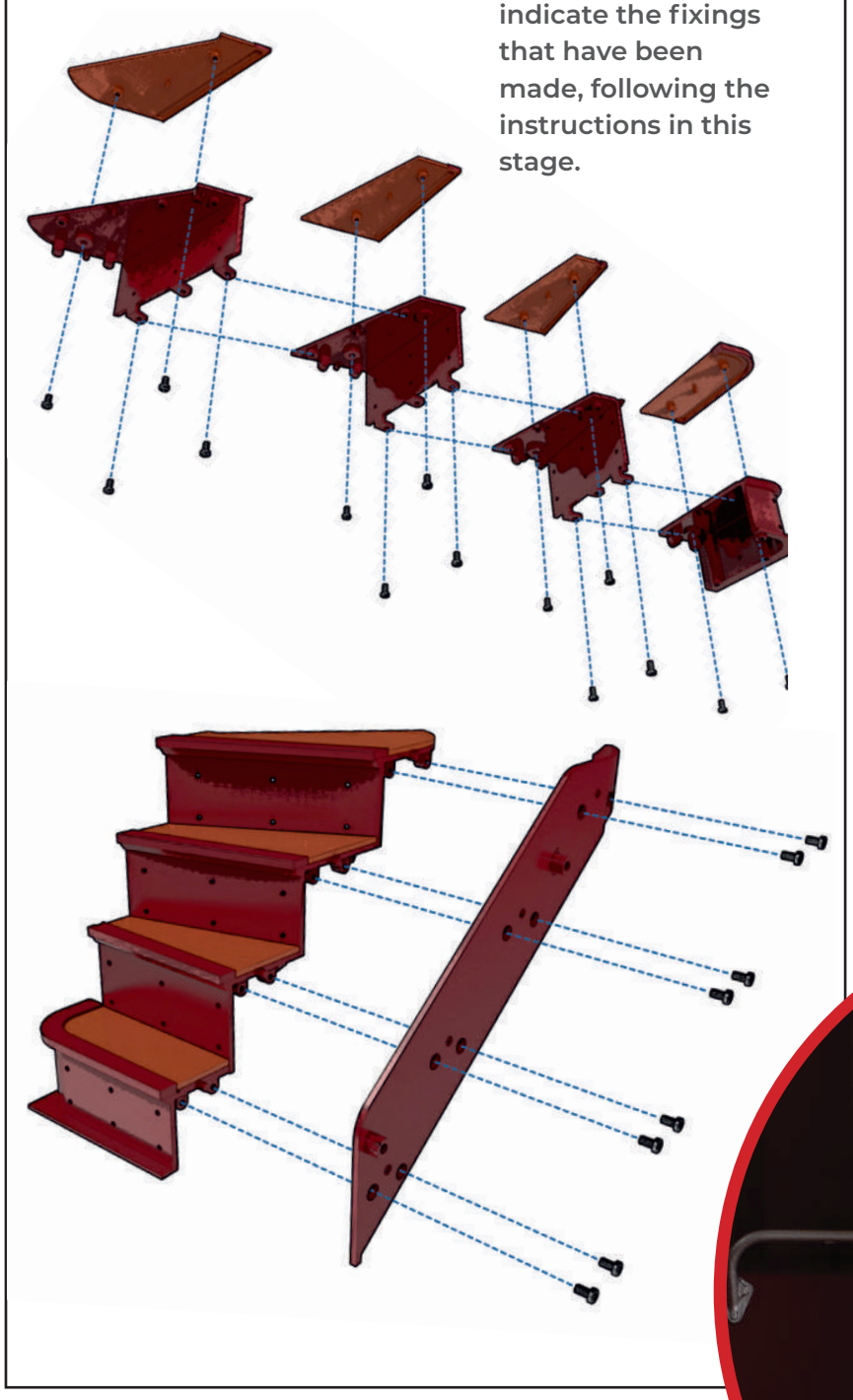

Finished view

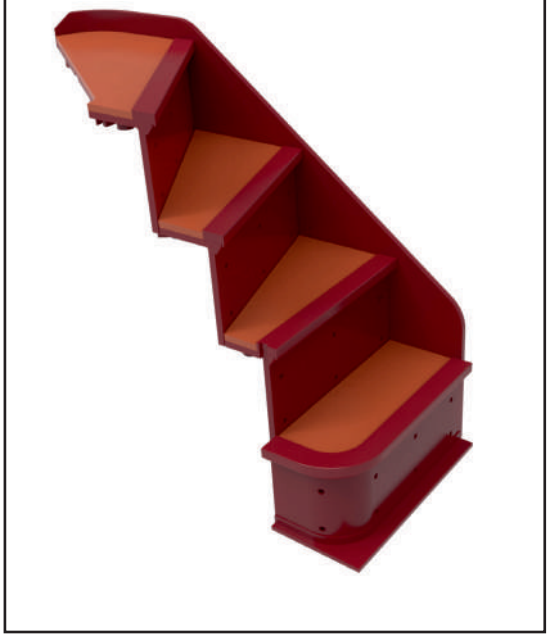

You have now completed the lower part of the staircase. The kick panels visible in the photograph (right) will be added in the next stage.

STAGE 04

KICK PLATES, STAIR SIDE PANEL AND PLATFORM

Continue building the stairs, adding the kick plates to the risers. The side panel keeps the stairs straight, and the boarding platform is added beneath the stairs.

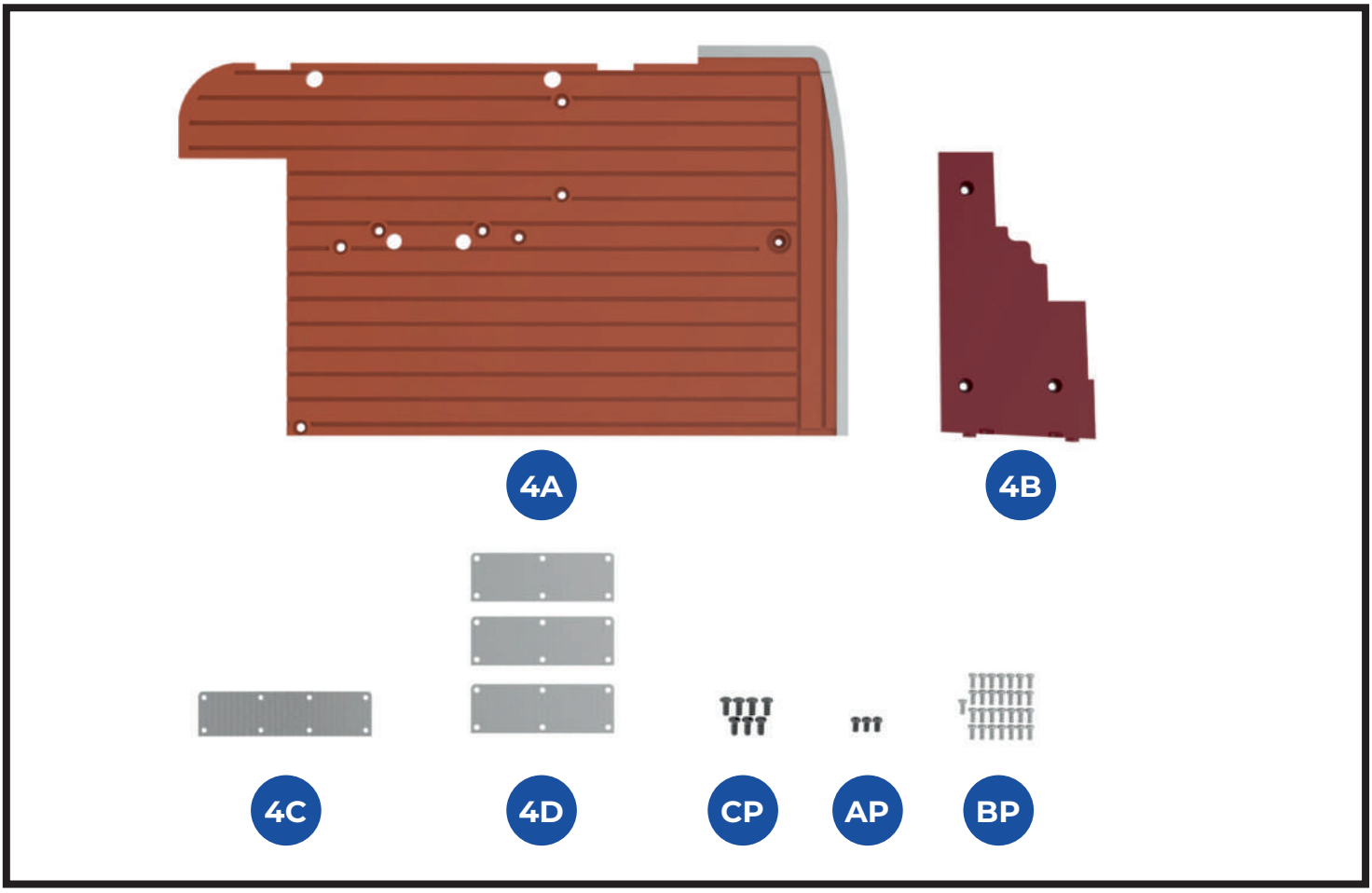

KEY TO PARTS SUPPLIED

4A Rear platform
4B Stair side panel
4C Large kick plate
4D Small kick plate (x3)
CP 2.0 x 4mm screws (x7)
AP 1.7 x 3mm screws (x3)
BP 1.5 x 3mm screws (x29)

• When fitting the kick plates, note that only one side is textured: this should face outwards. Also, two of the corners of each kick plate are rounded: the rounded corners go at the top of the plates when they are fitted.
• Check the platform to identify the ribbed upper surface.

1

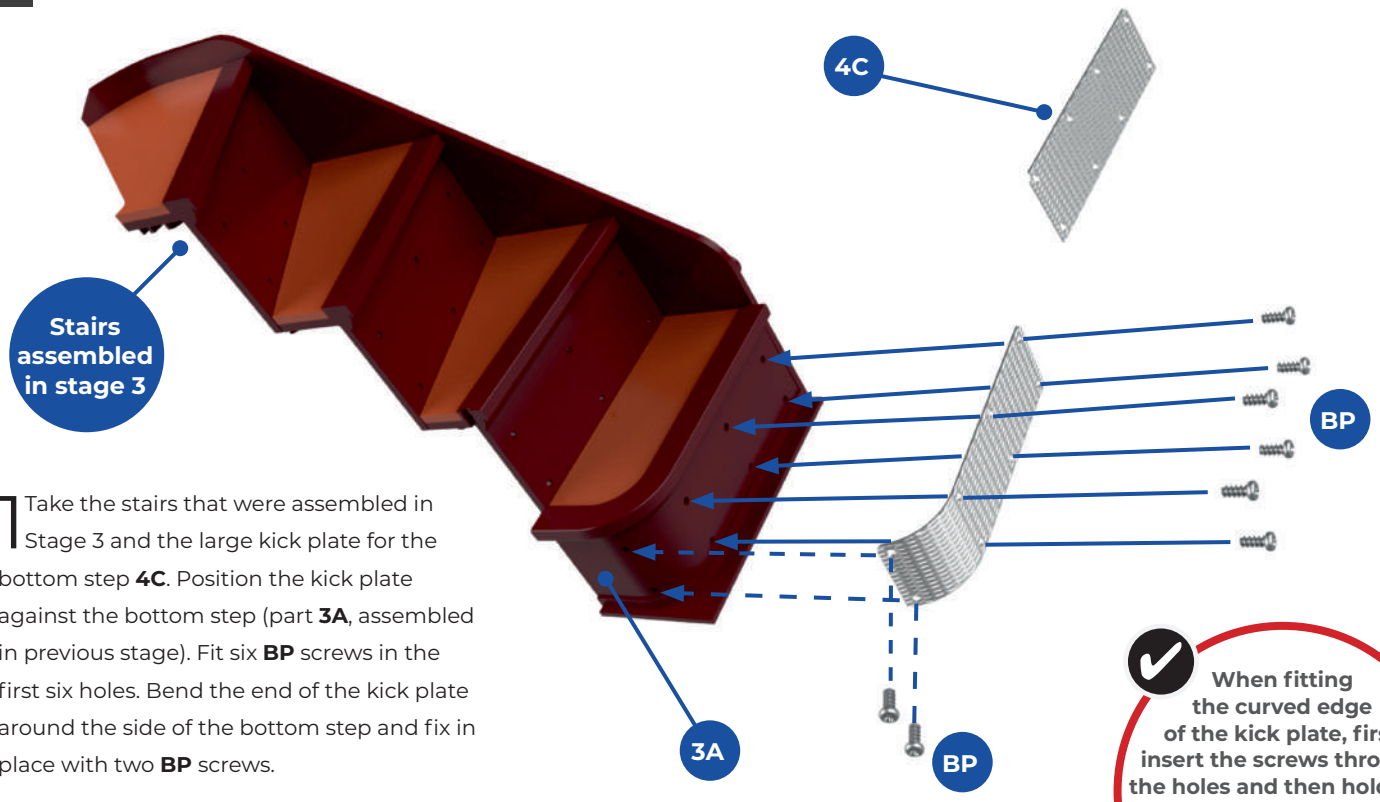

1 Take the stairs that were assembled in Stage 3 and the large kick plate for the bottom step **4C**. Position the kick plate against the bottom step (part **3A**, assembled in previous stage). Fit six **BP** screws in the first six holes. Bend the end of the kick plate around the side of the bottom step and fix in place with two **BP** screws.

When fitting the curved edge of the kick plate, first insert the screws through the holes and then hold the end firmly in place around the curve of the stair as you tighten the screws.

2

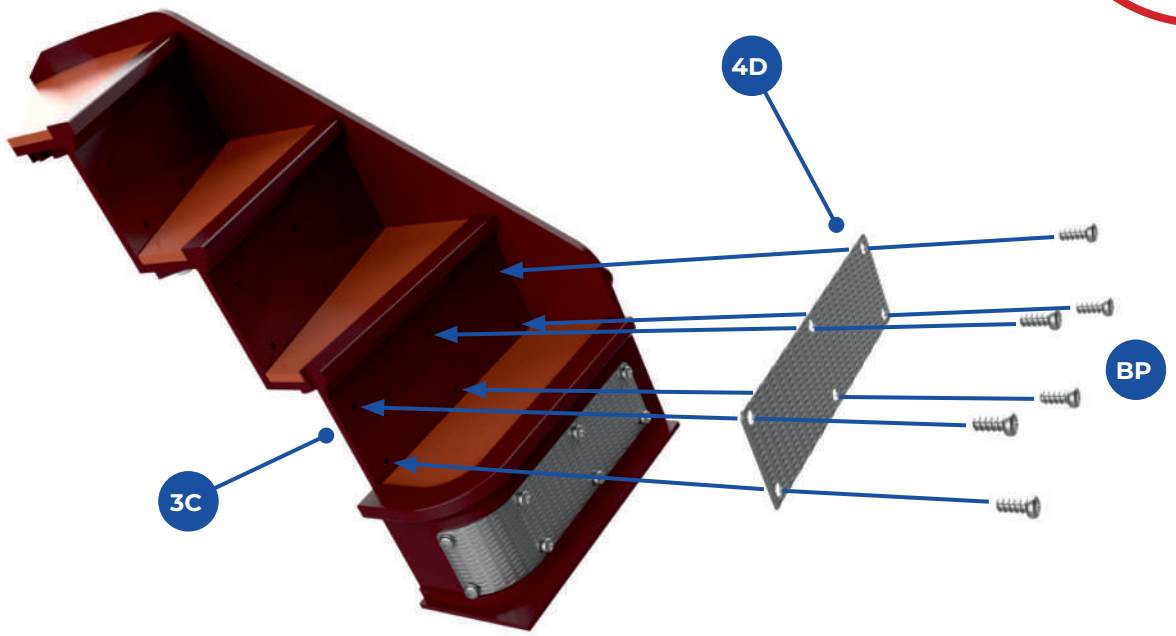

2 Take the first of the three short kick plates **4D** and use six **BP** screws to fit the plate to the riser (part **3C**) of the second step.

3

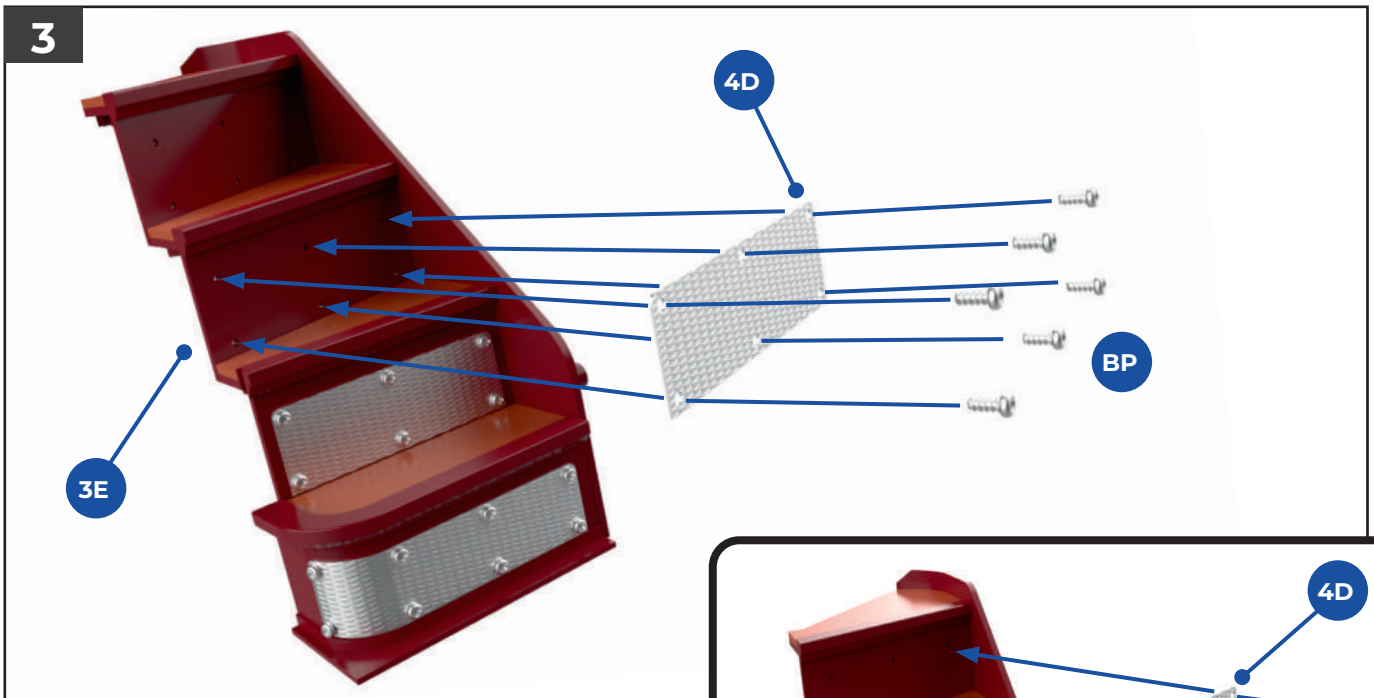

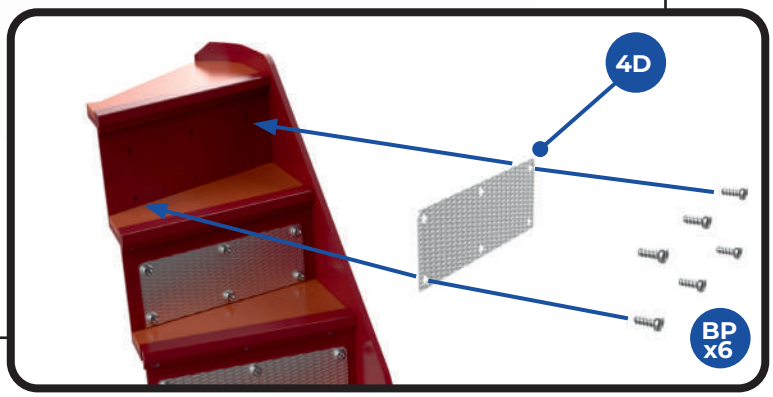

3 Repeat step 2 to fit the second kick plate **4D** to the riser of the next step, **3E**, and then the third kick plate **4D** to the front of the top **3G** (right), using six **BP** screws for each kick plate.

4

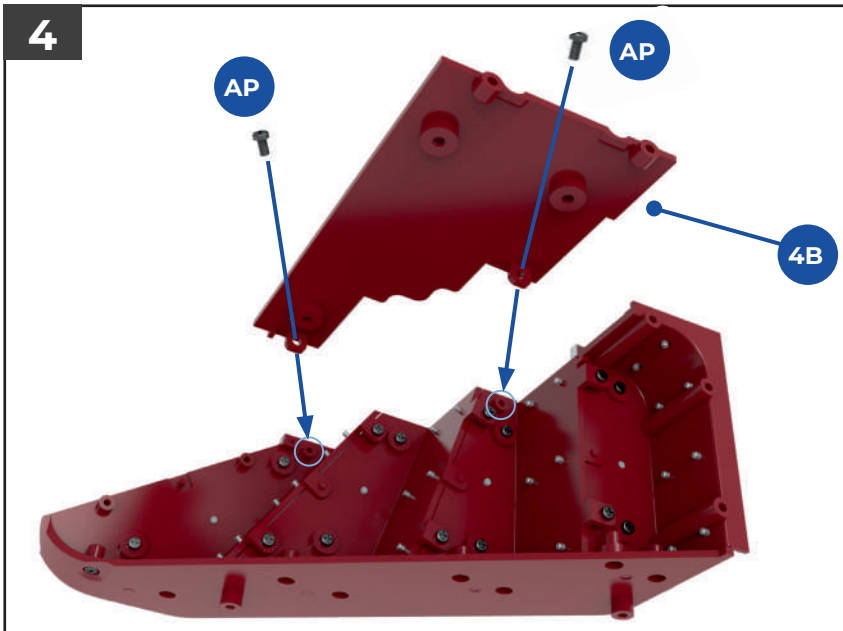

4 Working from below, fit two **AP** screws through the screw flanges on the 'stepped' edge of the side panel **4B**. Position the side panel against the stair assembly so that you can fix the side panel in place by securing the screws into the holes in the second and top steps (circled). Viewed from the outside, the side panel should be flush with the eges of the steps (right).

5

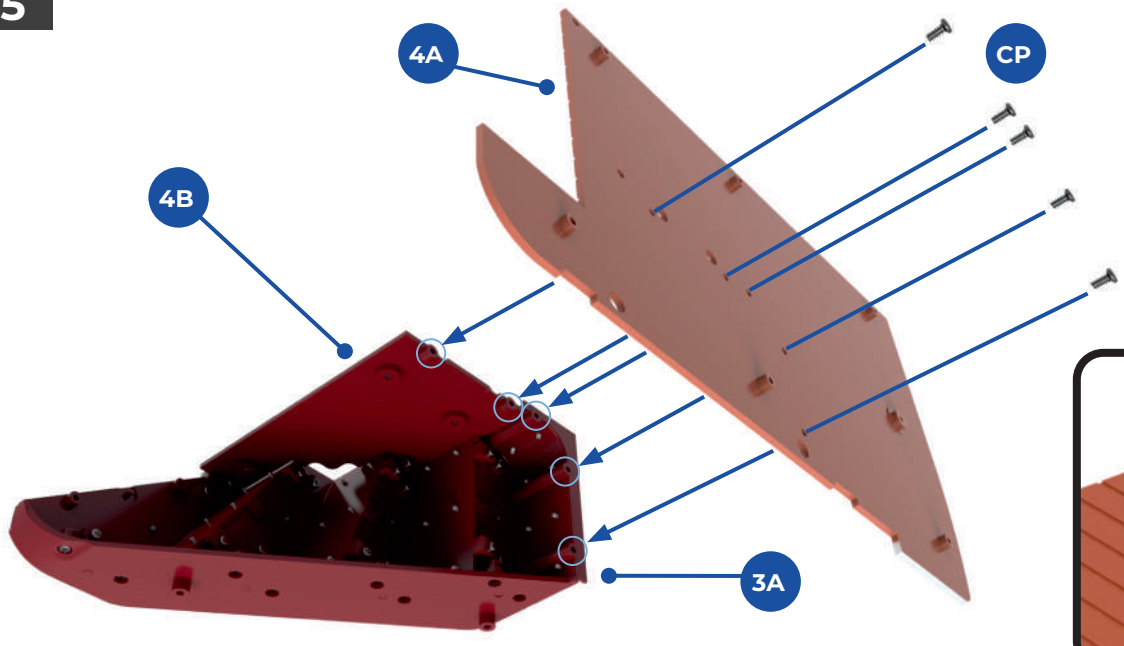

Make sure you have the platform the right way round. The curved corner is below the curve of the top step.

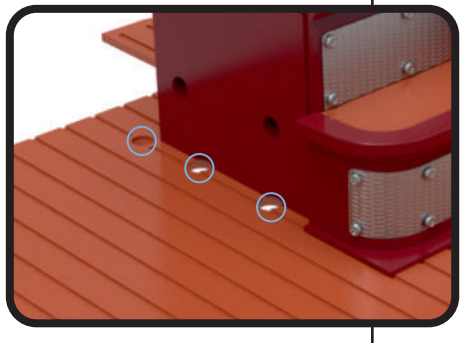

5 Working from below, fit the platform to the bottom of the staircase by locating the protrusions at the base of the staircase (circled) into the corresponding holes in the platform. Secure in place by fitting five **CP** screws through the holes in the platform into the screw sockets on the lower edge of the side panel **4B** and the bottom step **3A.** Three holes remain unused along the side of the stairs (inset, circled).

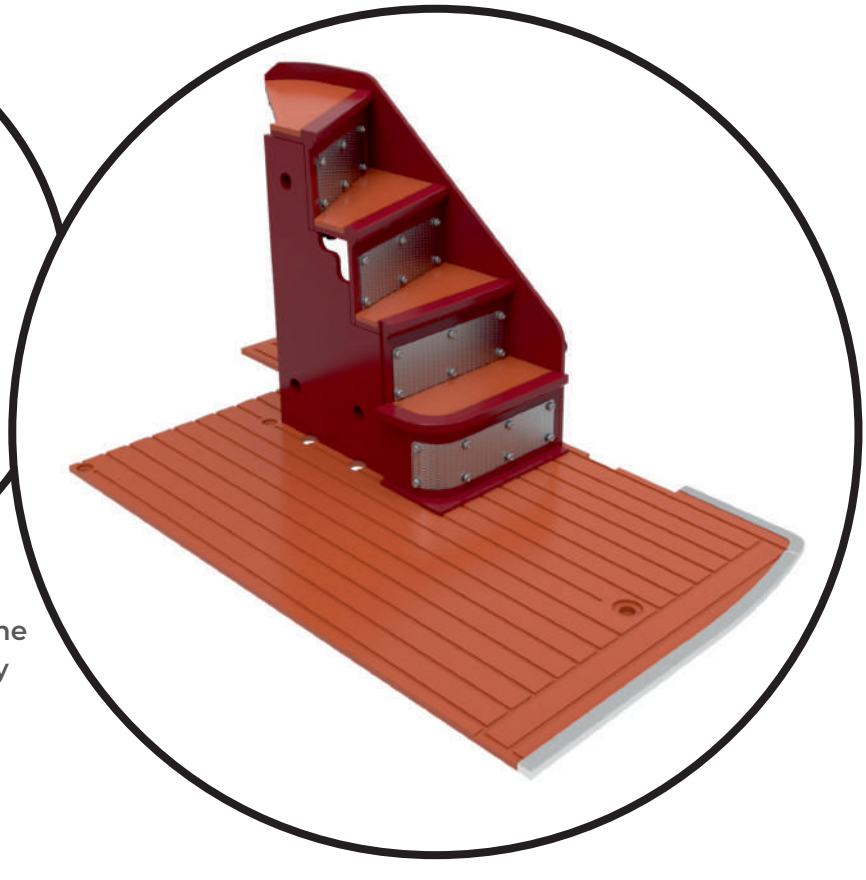

The first four steps are now attached to the platform of the bus. You can see how they curve to fit the back offside (driver's side) corner of the vehicle.

Assembly guide

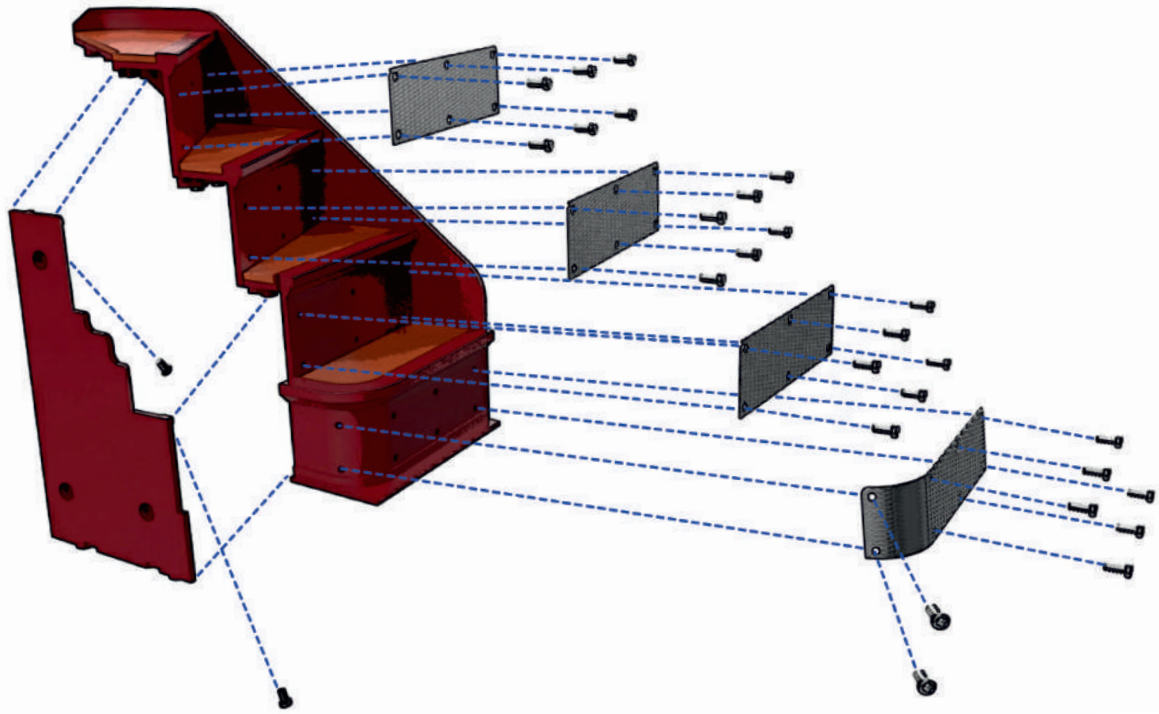

These diagrams indicate the fixings that have been made, following the instructions in this stage.

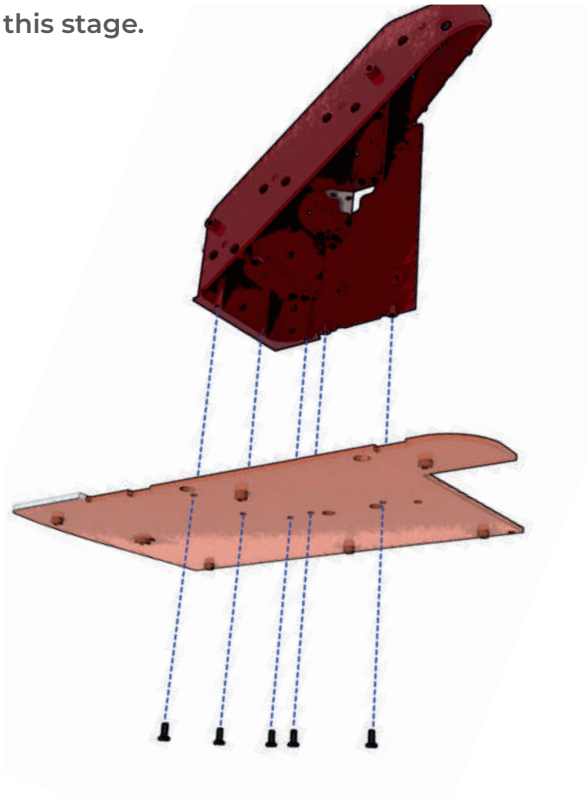

This Routemaster was running a few years ago when it operated as one of Transport for London's Heritage routes. The spacious platform and risers with kick plates are clearly visible. The yellow edging was a more recent addition.

STAGE 05

SUSPENSION ARM ASSEMBLY

Brackets, axles and links are fitted to each end of the suspension arm in the first steps towards building the front suspension system of the Routemaster.

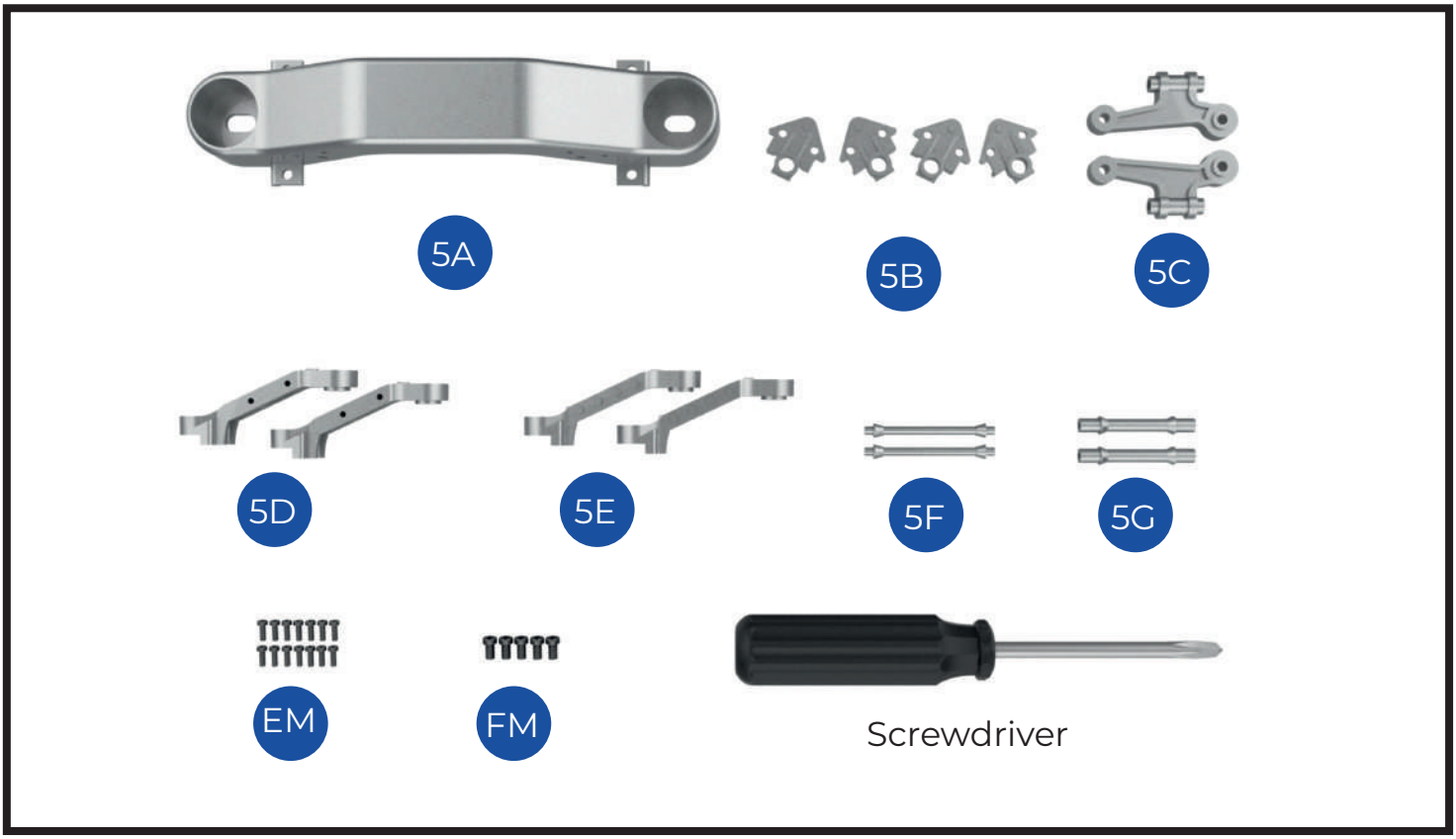

KEY TO PARTS SUPPLIED

5A Suspension arm
5B Trailing link brackets (x4)
5C Turn axle link (x2)
5D Lower trailing link (right-handed, x2)
5E Lower trailing link (left-handed, x2)
5F Trailing link spacer (x2)
5G Trailing link axle (x2)
EM 1.5 x 4mm (14 supplied)
FM 2.3 x 4mm (5 supplied)

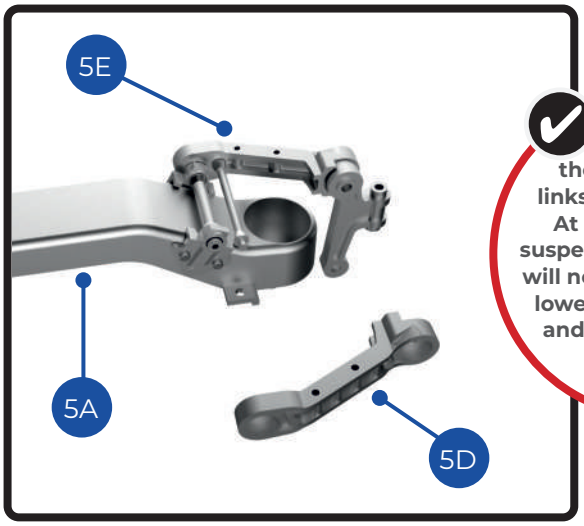

Note that the lower trailing links operate in pairs. At each end of the suspension arm (5A) you will need a 'left-handed' lower trailing link (5E) and a 'right-handed' one (5D).

1

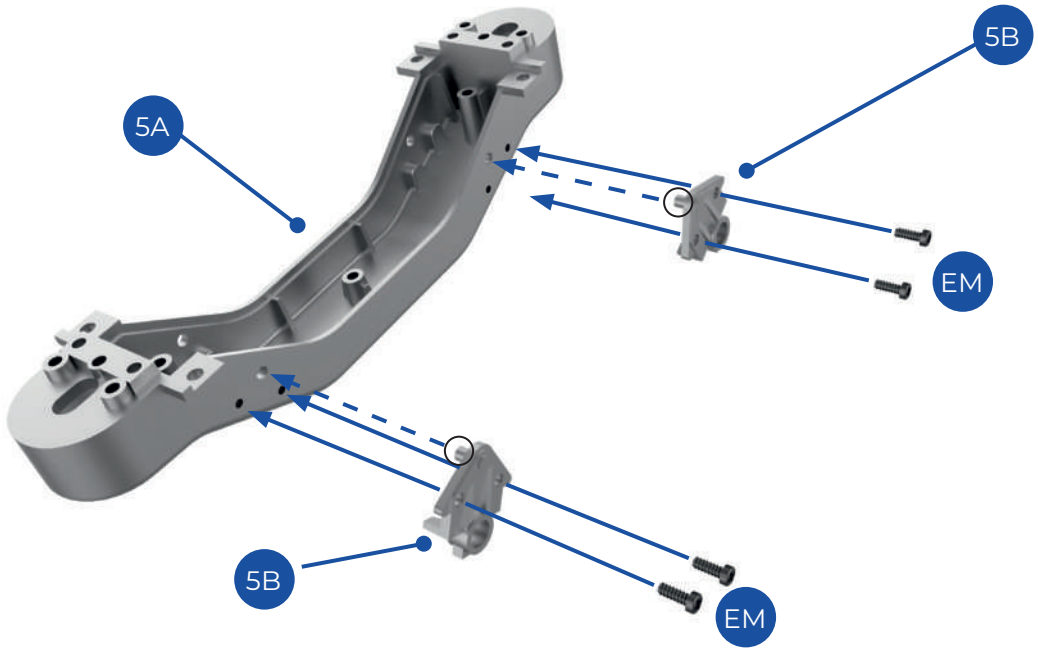

1 Take two of the trailing link brackets (**5B**) and fit them to one side of the suspension arm (**5A**). NOTE: There are pegs on the corners of the trailing link brackets (circled) that fit into holes in the suspension arm (see dotted lines). Use two **EM** screws to fit each bracket to the suspension arm, passing through the two small holes in the trailing link brackets.

2

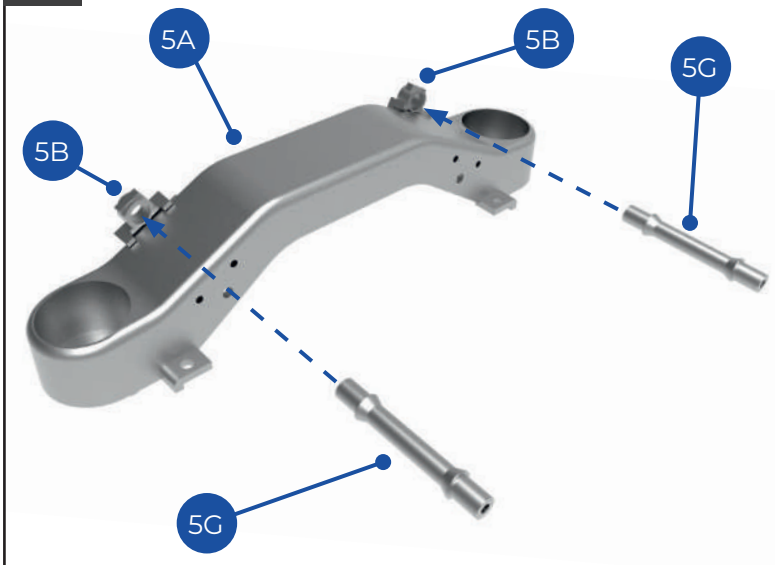

2 After turning the assembly over, take the two trailing link axles (**5G**) and put one end into the large holes in the brackets (**5B**) as indicated (see also step 3, with the axles in position). They are not fixed in place at this stage. NOTE: The trailing link axles (**5G**) are slightly shorter than the trailing link spacers (**5F**).

3

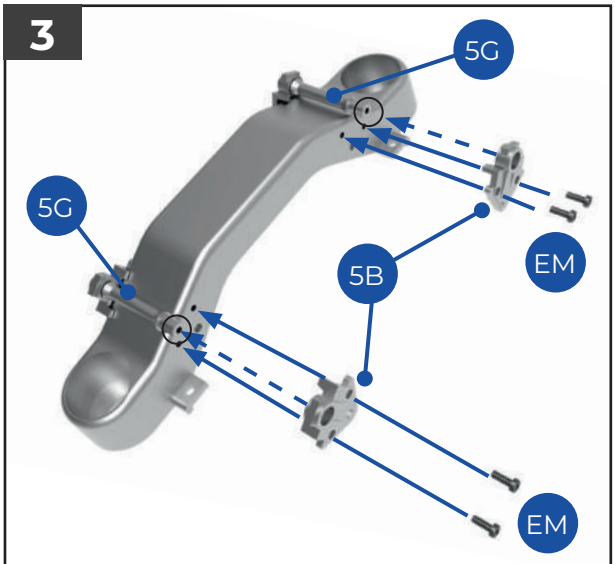

3 Repeating Step 1, take the other two trailing link brackets (**5B**) and fit them to the other side of the suspension arm (**5A**). Locate the pegs in the holes as before, and ensure that the free ends of the trailing link axles (**5G**, circled) are held in place in the large holes in the brackets. Fix each bracket in place with two **EM** screws.

4

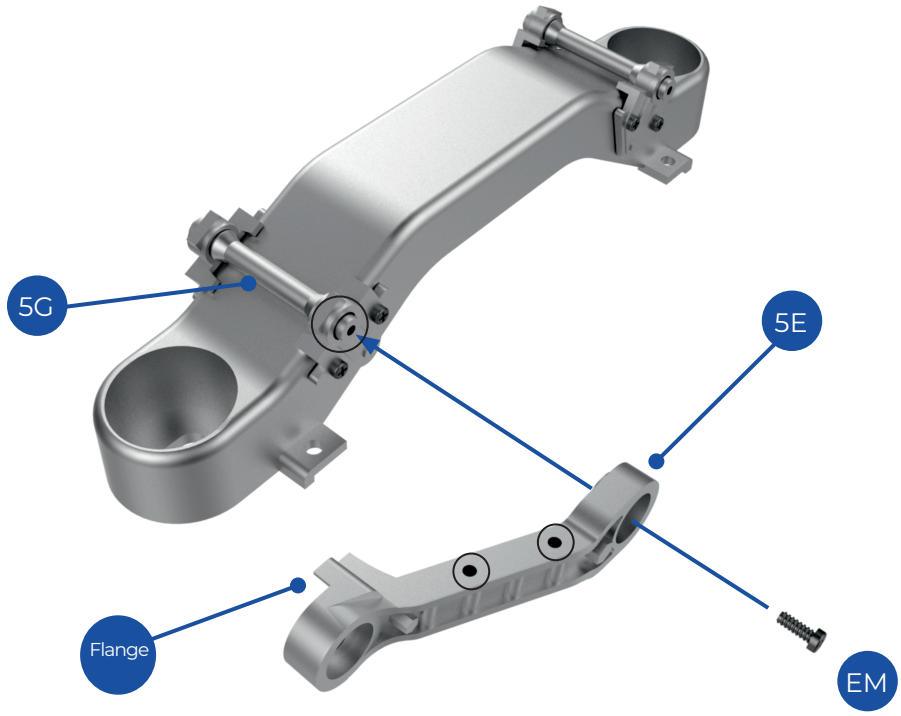

4 Take one of the 'left-handed' lower trailing links (**5E**). You will see that one end has a flange, and there are two small holes facing upwards (circled). Fit the part, as shown, over the end of the trailing link axle (**5G**, circled). NOTE that the end of part **5G** has a flat side, which matches a flat side of the hole in part **5E**. Fix in place with an **EM** screw, which goes into the end of the axle.

5

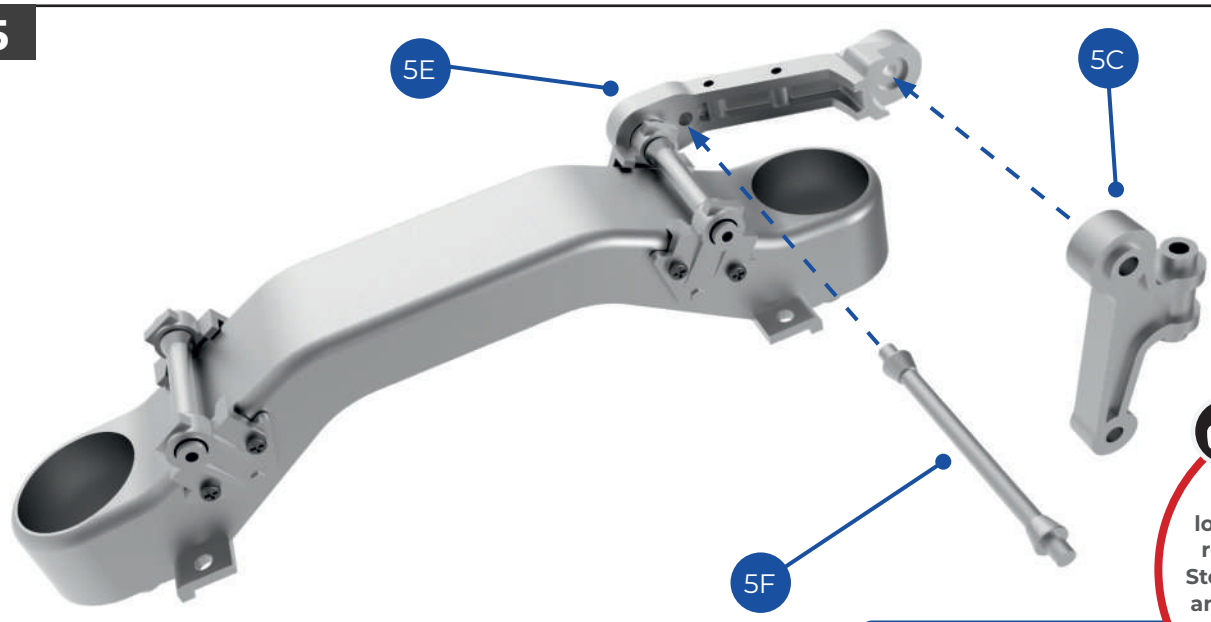

Have a 'right-handed' lower trailing link (5D) ready as you prepare Step 5. It will be used to anchor the trailing link spacer (5F) in the next step.

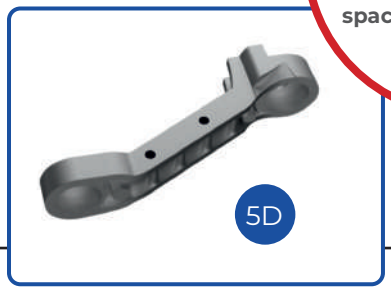

5 Take one of the trailing link spacers (**5F**) and fit one end into the hole in link **5E** (fitted in Step 4). At the same time, fit the larger end of the turn axle link (**5C**) into the other end of link **5E**, as shown. The pieces are not fixed at this stage.

6

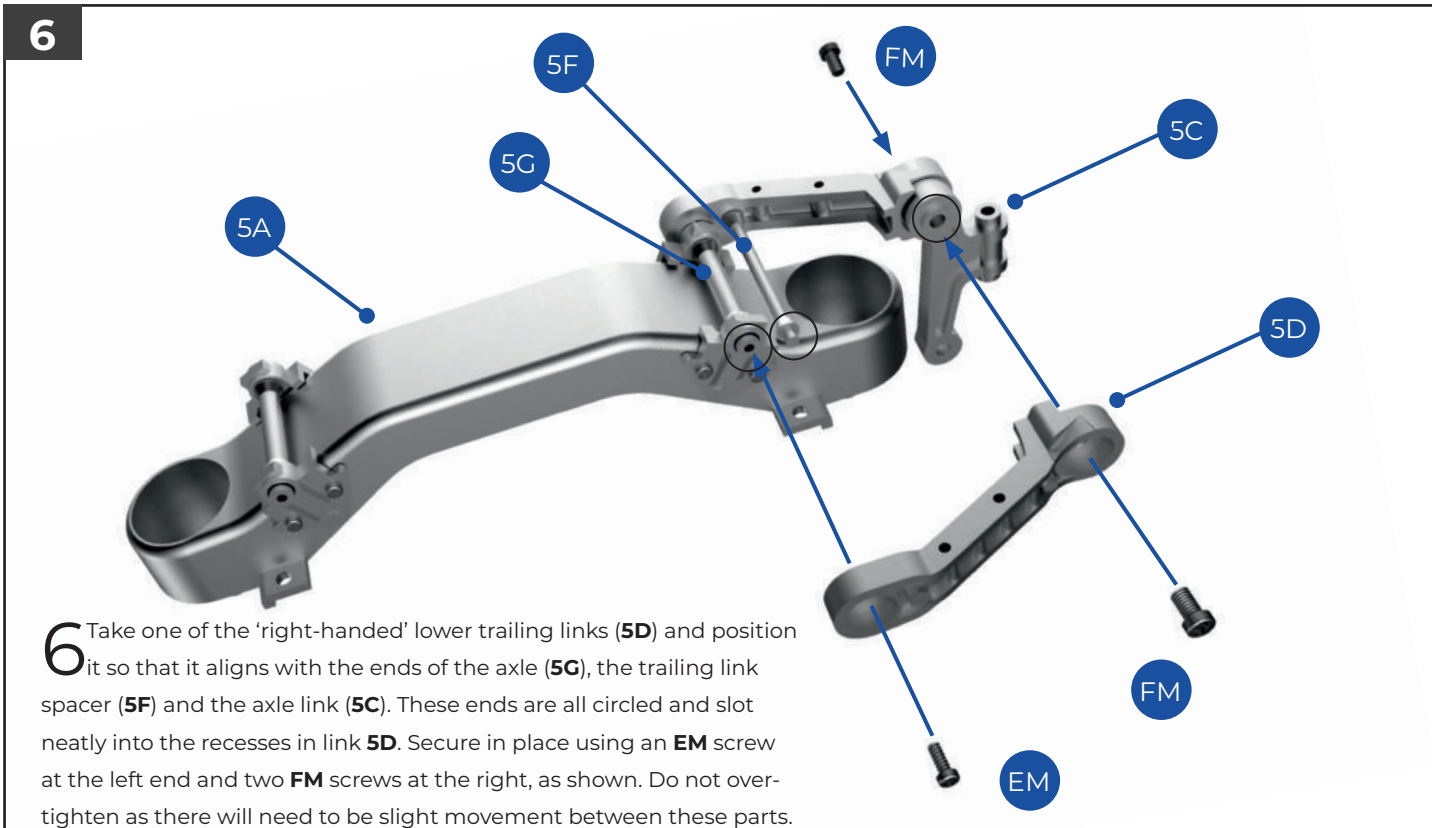

6 Take one of the 'right-handed' lower trailing links (**5D**) and position it so that it aligns with the ends of the axle (**5G**), the trailing link spacer (**5F**) and the axle link (**5C**). These ends are all circled and slot neatly into the recesses in link **5D**. Secure in place using an **EM** screw at the left end and two **FM** screws at the right, as shown. Do not over-tighten as there will need to be slight movement between these parts.

7

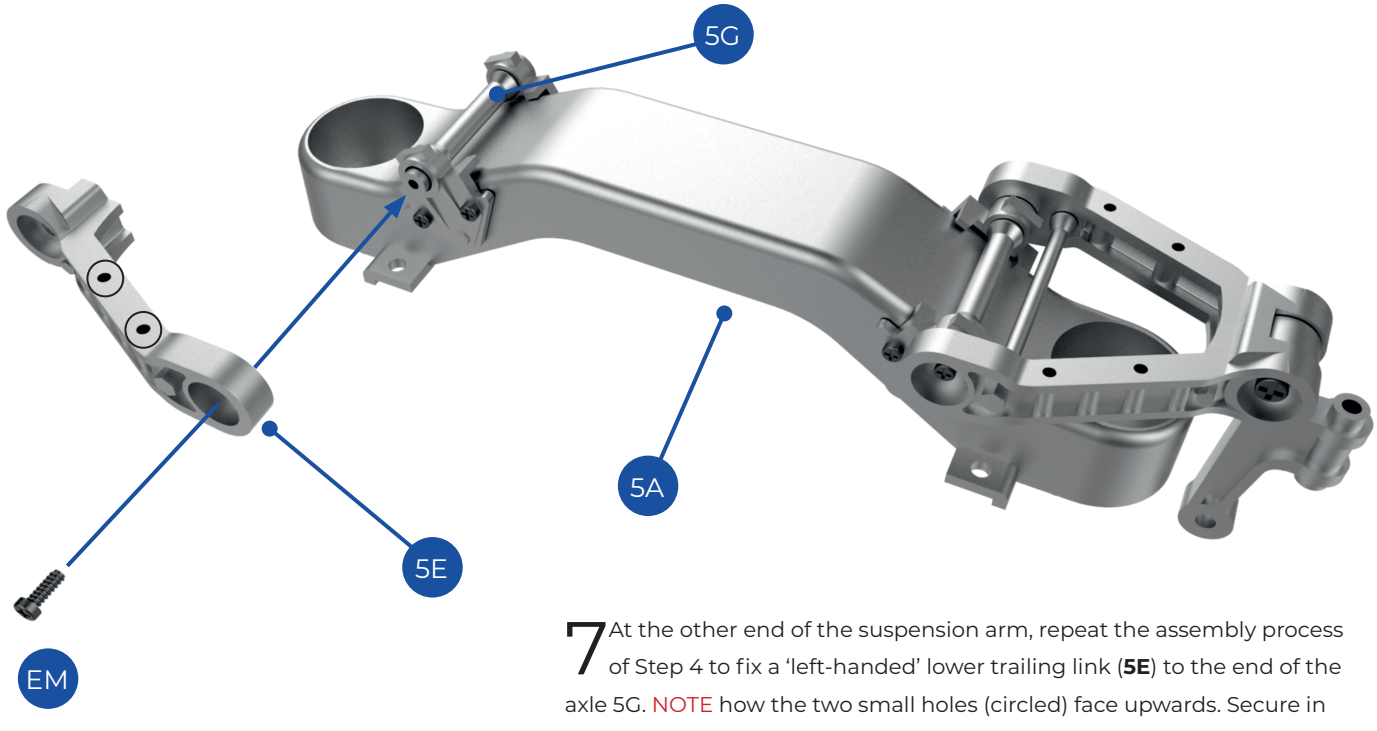

7 At the other end of the suspension arm, repeat the assembly process of Step 4 to fix a 'left-handed' lower trailing link (**5E**) to the end of the axle 5G. NOTE how the two small holes (circled) face upwards. Secure in position with an **EM** screw, as shown.

8

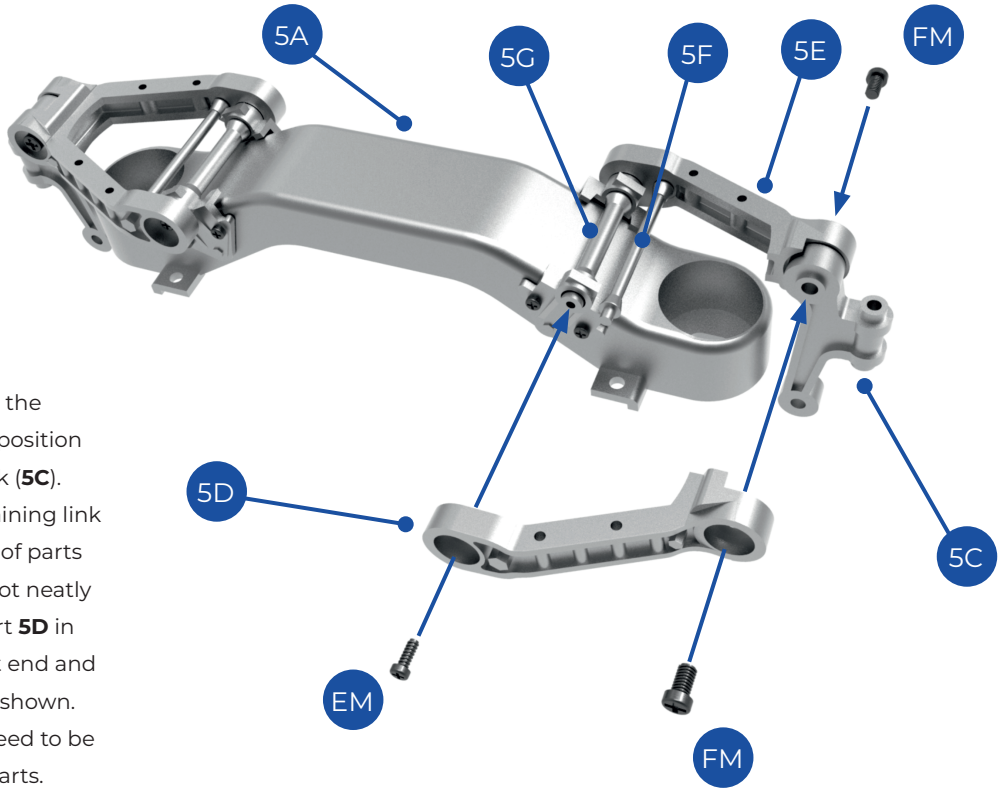

8 Following the diagram, repeat the assembly process in Step 5 to position a spacer (**5F**) to link **5E** and axle link (**5C**). Repeat Step 6 to position the remaining link (**5D**) so that it aligns with the ends of parts **5G**, **5F** and **5C**. Again, these ends slot neatly into recesses in part **5D**. Secure part **5D** in place using an **EM** screw at the left end and two **FM** screws at the right end, as shown. Do not over-tighten as there will need to be slight movement between these parts.

Assembly guide and finished views

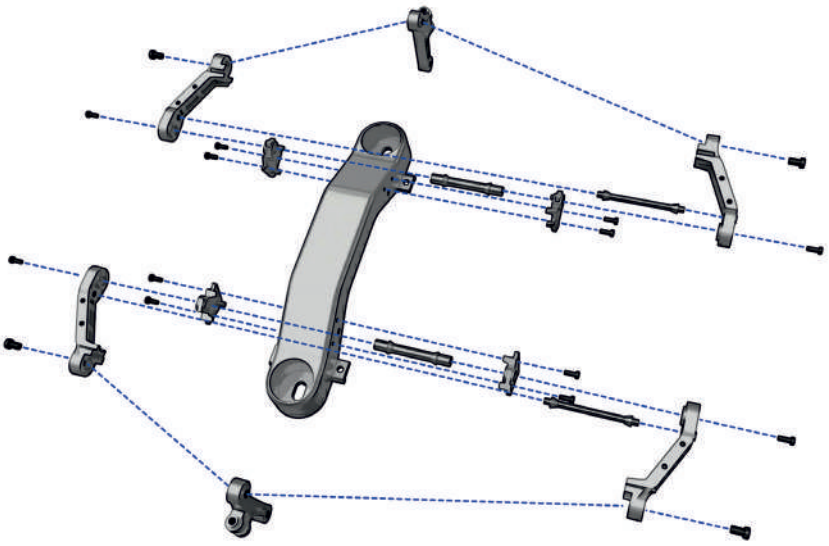

This completes the work for Stage 5 – the first part of the front suspension, which revolutionised the smoothness of the ride when the Routemaster took to the roads.

STAGE 06

FITTING SHOCK ABSORBERS

In this stage, we continue work on the suspension, adding shock absorbers and a cover to the suspension arm assembled in the previous stage.

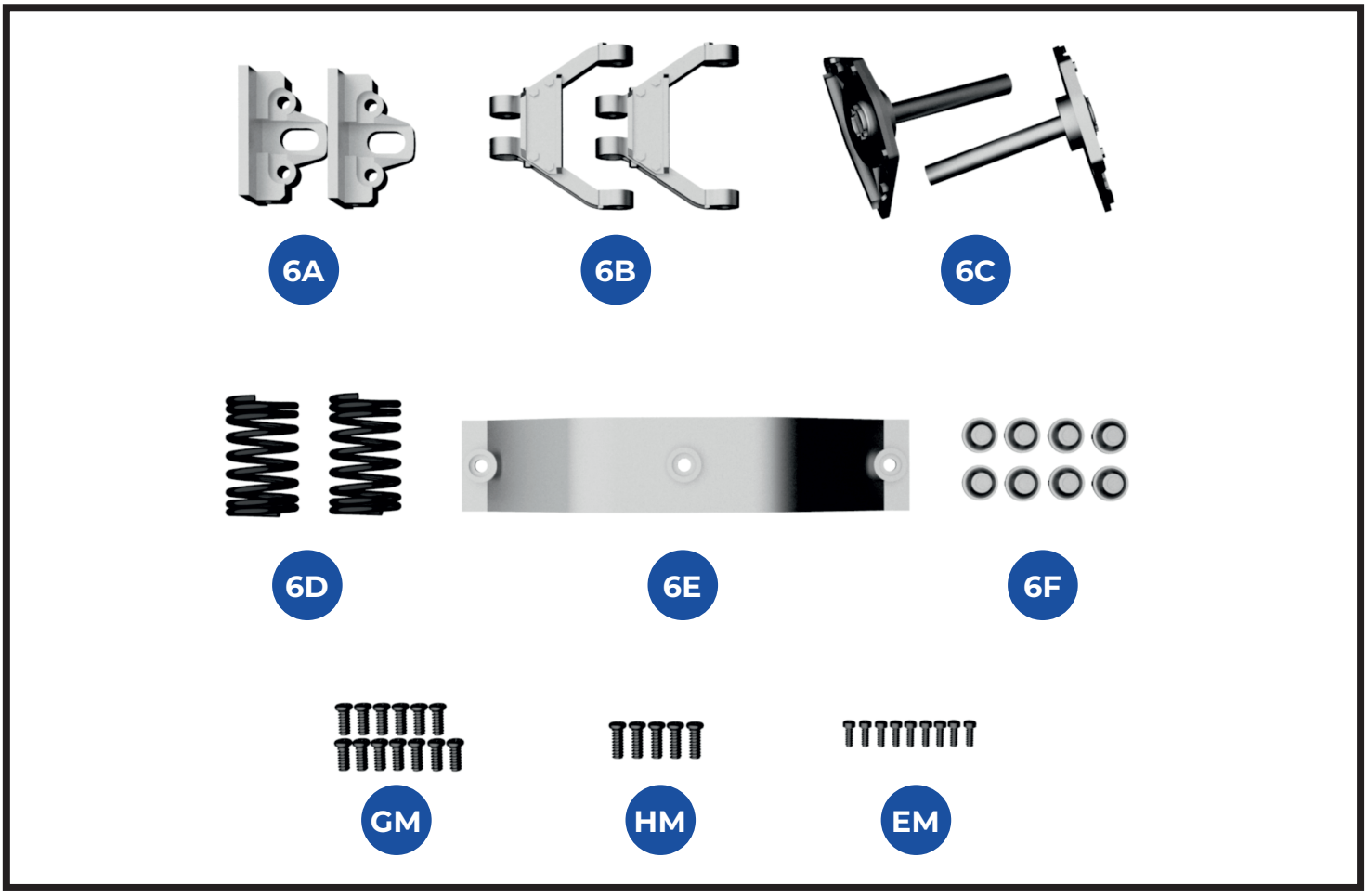

KEY TO PARTS SUPPLIED

6A Trailing link mount (x2)
6B Upper trailing link (x2)
6C Shock absorber fixture (x2)
6D Shock absorber spring (x2)
6E Suspension arm cover
6F Cap (x8)

GM 2.3 x5mm (x13)
HM 2.3 x6mm (x5)
EM 1.5 x4mm (x9)

In this issue, we continue to build the suspension. You will need the suspension arm and parts that you assembled in Issue 5.

1

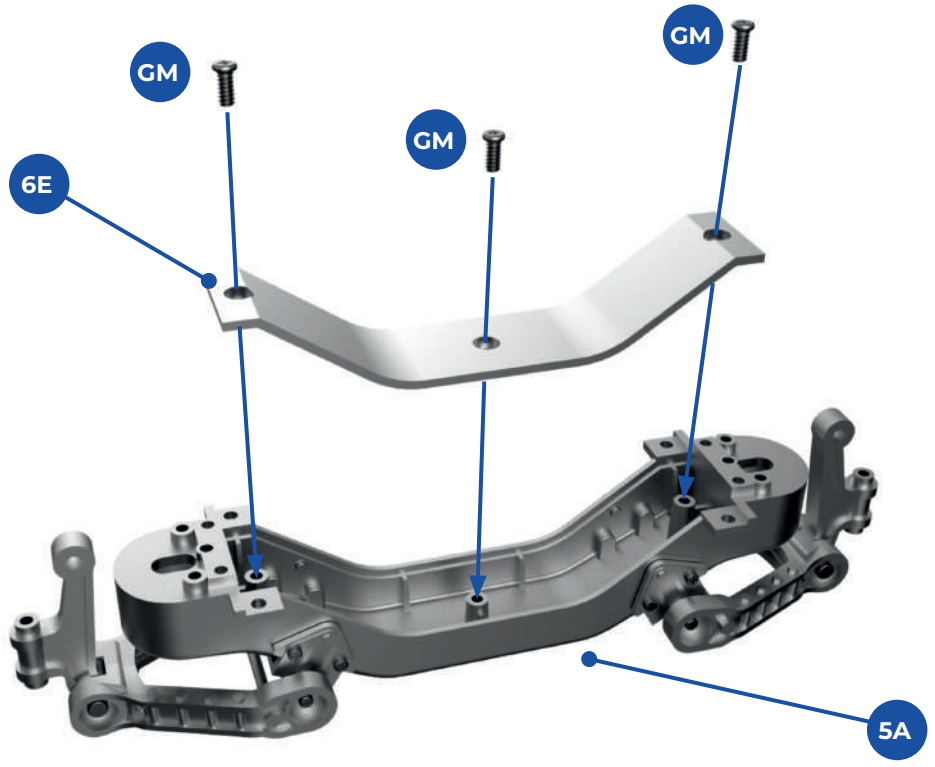

1 Fit the suspension arm cover (**6E**) to the open side of the suspension arm (**5A**). Fix in place with three **GM** screws. **NOTE:** the screws go through the suspension arm cover into the screw sockets in the suspension arm.

2

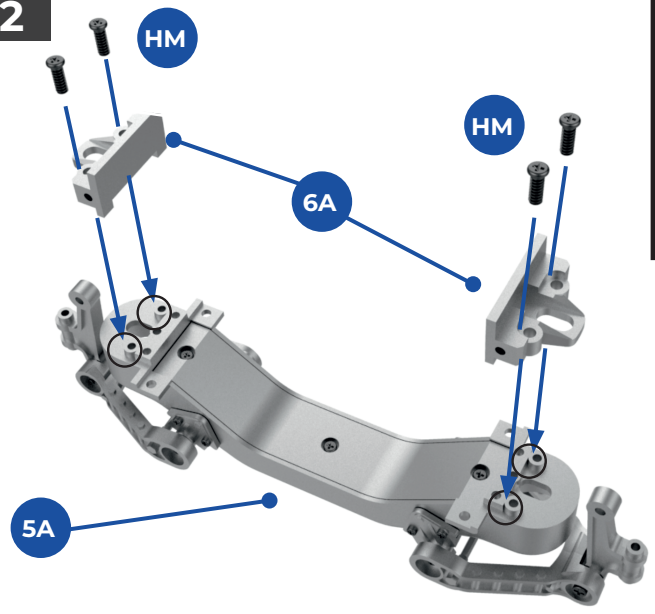

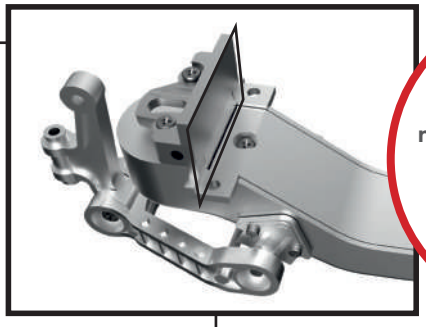

When fixed, the flat edge of the trailing link mount should be flush with the edge of the raised section of the suspension arm (outlined).

2 Fit a trailing link mount (**6A**) to each end of the suspension arm (**5A**). There is a peg on part **6A** that locates neatly into a hole in the suspension arm **5A**. Fix each of the mounts in place with two **HM** screws, screwing them into the raised sockets (circled) on the suspension arm.

3

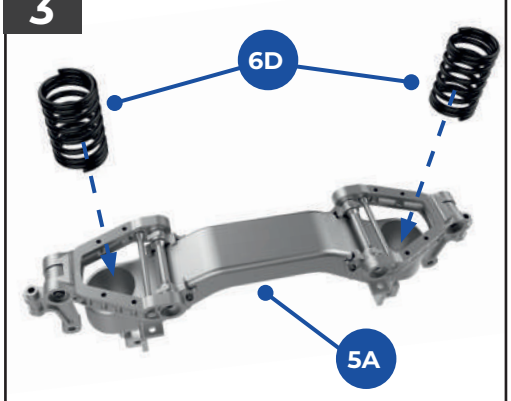

3 Turn the suspension arm over to reveal the large holes. Test fit a shock absorber spring (**6D**) into each of the holes.

4

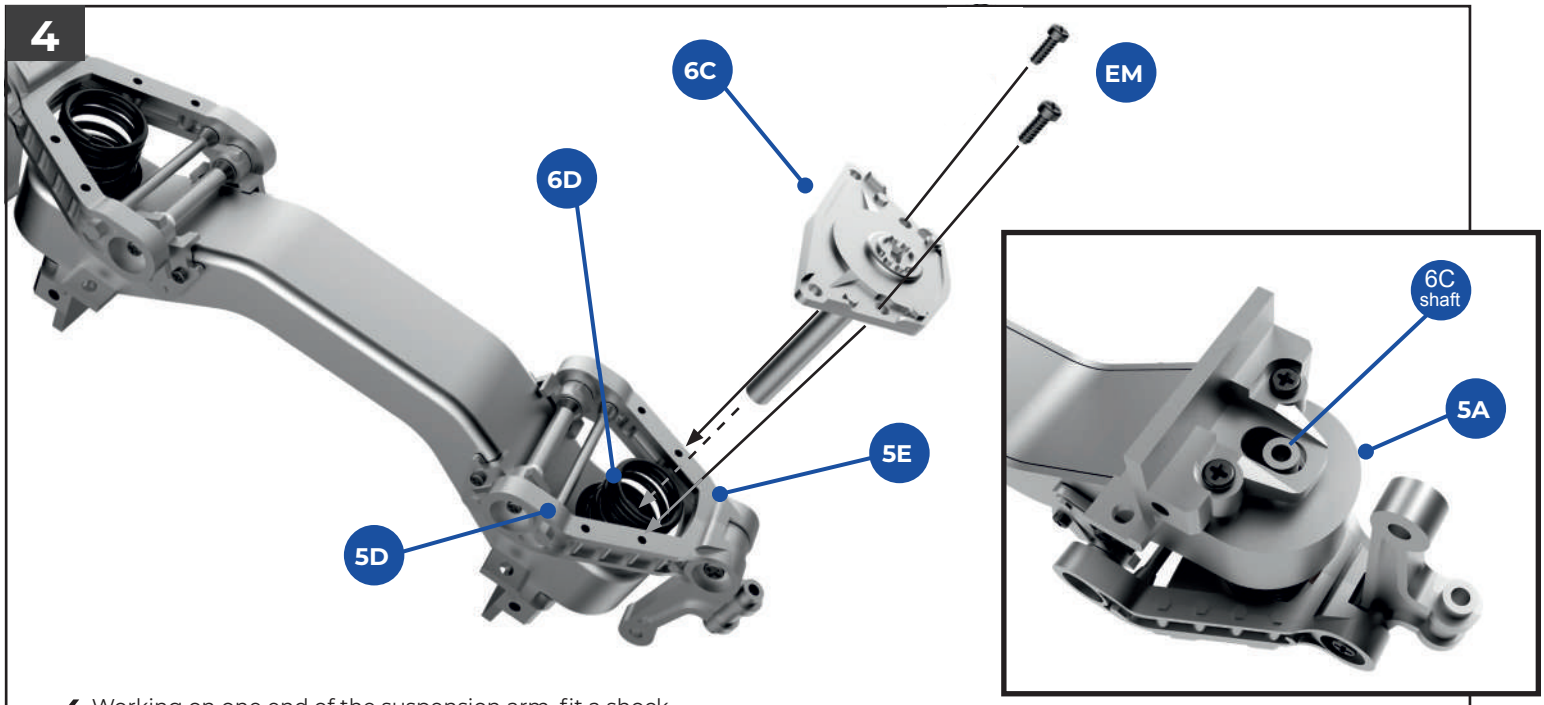

4 Working on one end of the suspension arm, fit a shock absorber fixture (**6C**) so that it holds the spring (**6D**) in place. Insert and half tighten two **EM** screws, fixing them through the flat plate of the shock absorber fixture into the sockets in the lower trailing links (**5E** and **5D**). Turn the assembly over and check that the shaft of fixture **6C** aligns with the hole in the suspension arm **5A** (inset).

5

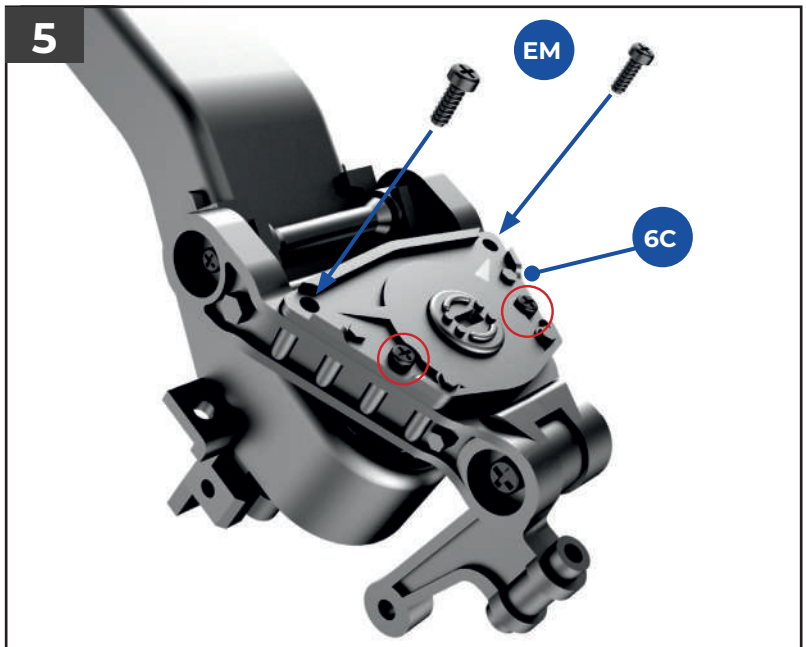

5 When you are happy with the position of the shaft, turn the suspension arm back over and further tighten the first two **EM** screws (circled in red). Then insert two more **EM** screws through the holes in the corners of the shock absorber fixture into the sockets in the lower trailing links. Tighten all the screws to secure the fixture in place.

6

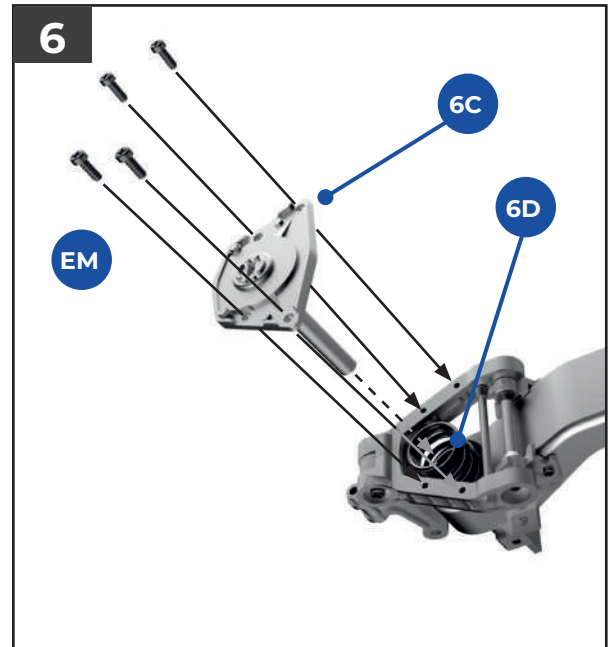

6 Repeat steps 4 and 5 to fit the spring **6D** and shock absorber fixture **6C** in place at the other end of the suspension arm, checking that the shaft is correctly aligned.

7

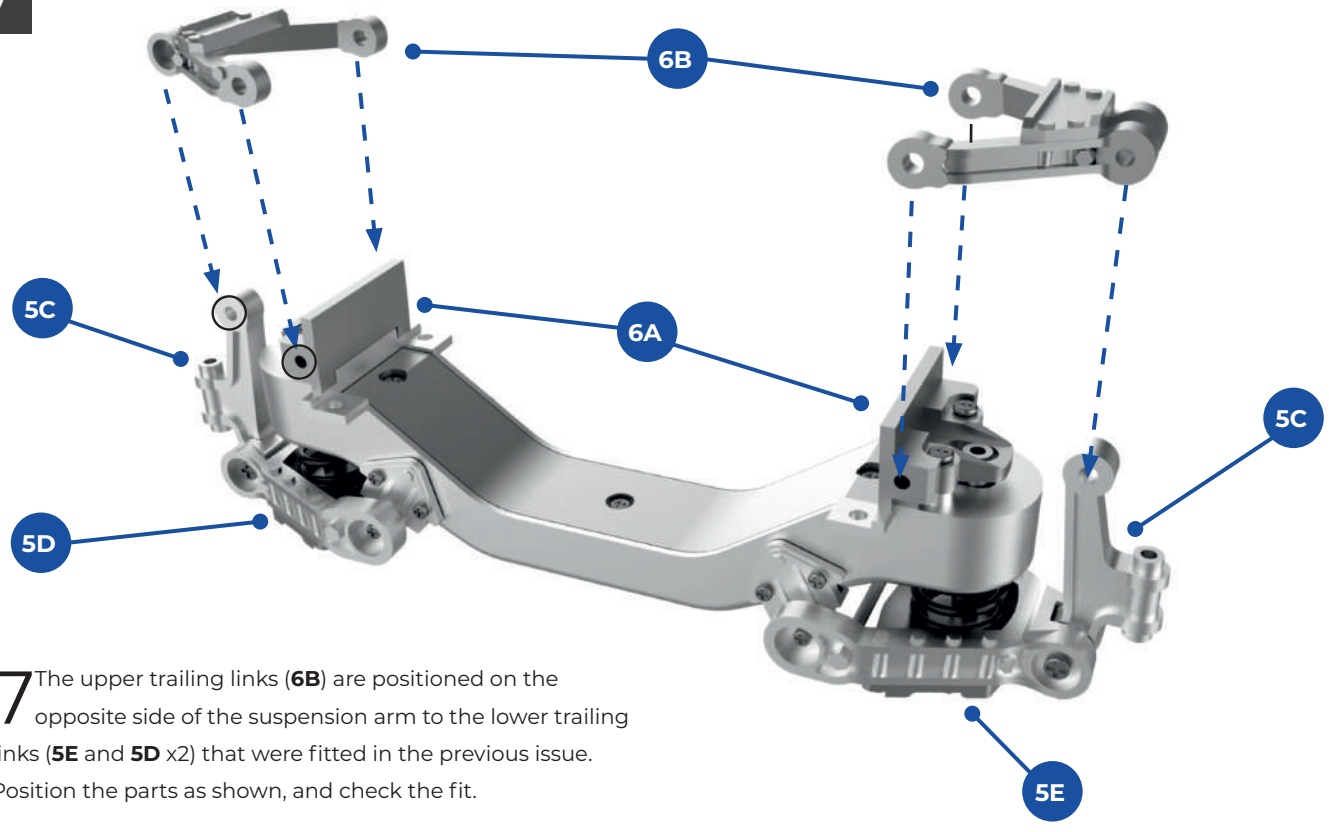

7 The upper trailing links (**6B**) are positioned on the opposite side of the suspension arm to the lower trailing links (**5E** and **5D** x2) that were fitted in the previous issue. Position the parts as shown, and check the fit.

8

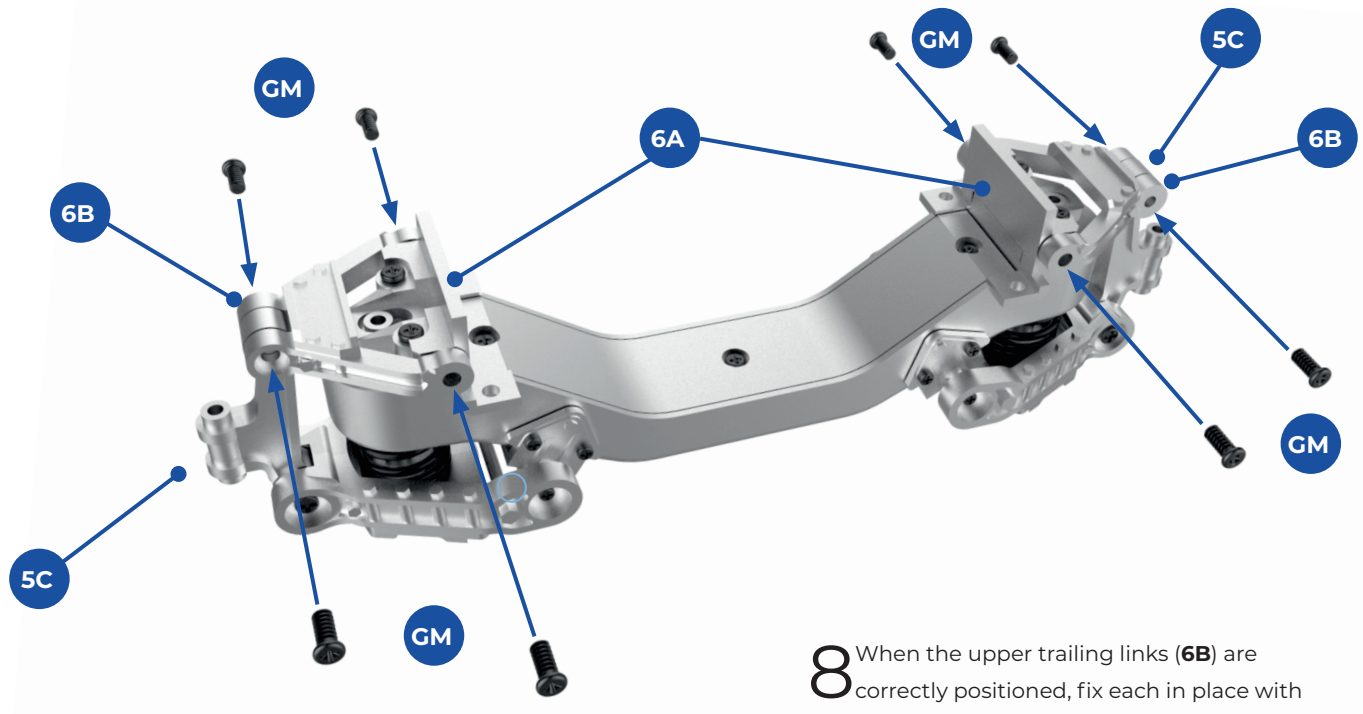

8 When the upper trailing links (**6B**) are correctly positioned, fix each in place with four **GM** screws. At each end, one screw is fitted to either side of the link (**5C**) and one into each side of the mount (**6A**).

9

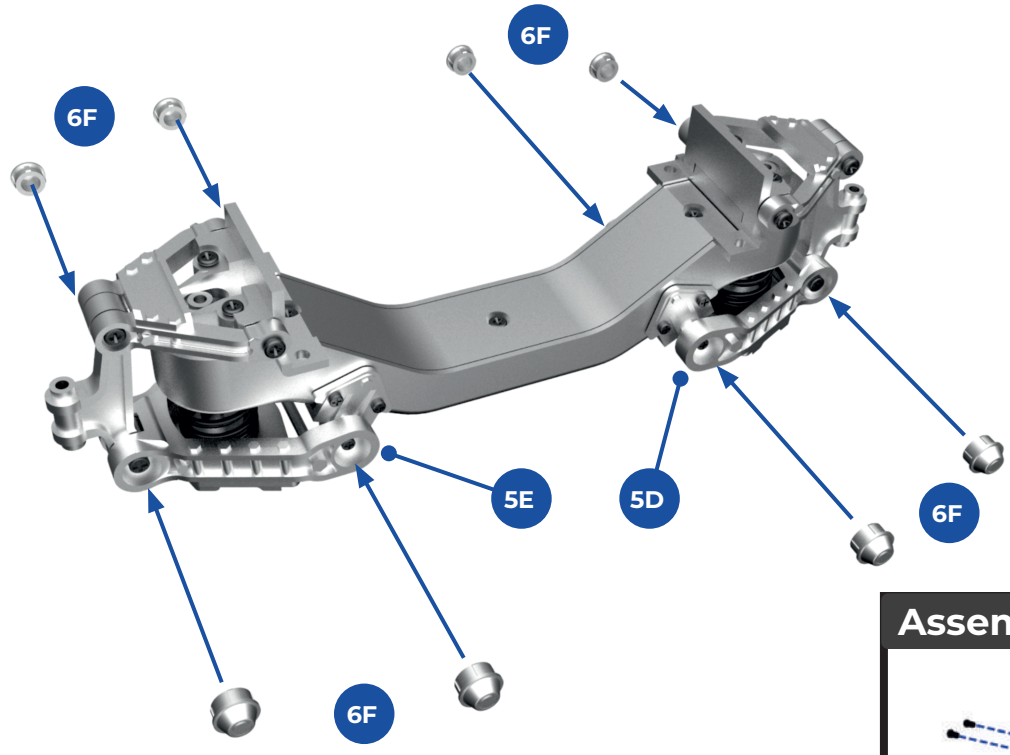

9 The eight caps (**6F**) fit into the screw socket recesses at each end of each of the links (**5E** and **5D**). They are push-fit fixings. The domed ends give a neat finish (inset, below).

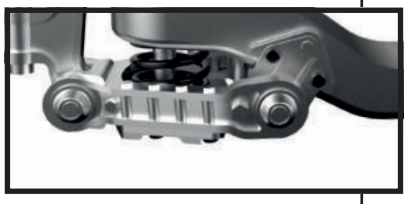

Assembly guide

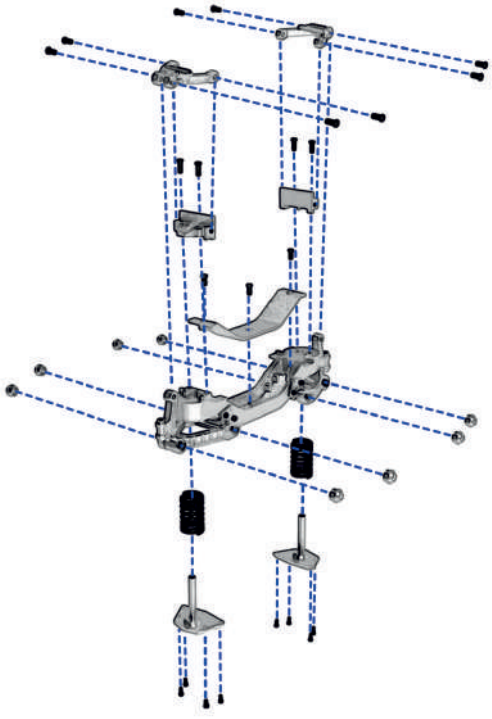

Finished views

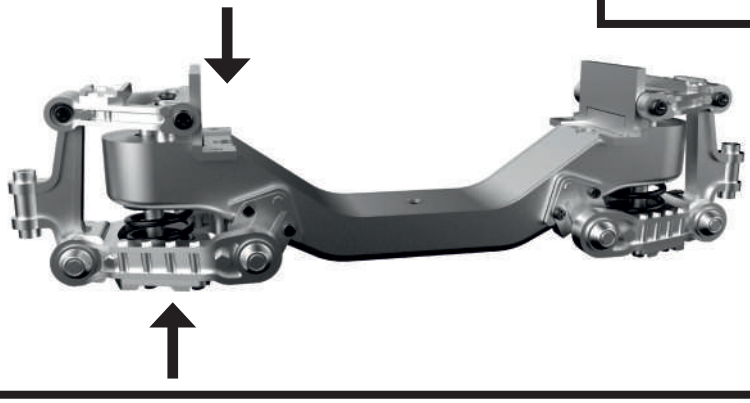

You have now completed the front suspension arm. The realism of the model can be seen by the springy effect when the suspension is compressed as shown by the arrows.

STAGE 07

FITTING THE FIRST BRAKE DISC

The parts in this stage are connected to the suspension arm assembly, completed in stage 6. This stage builds the first part of the braking system of your routemaster.

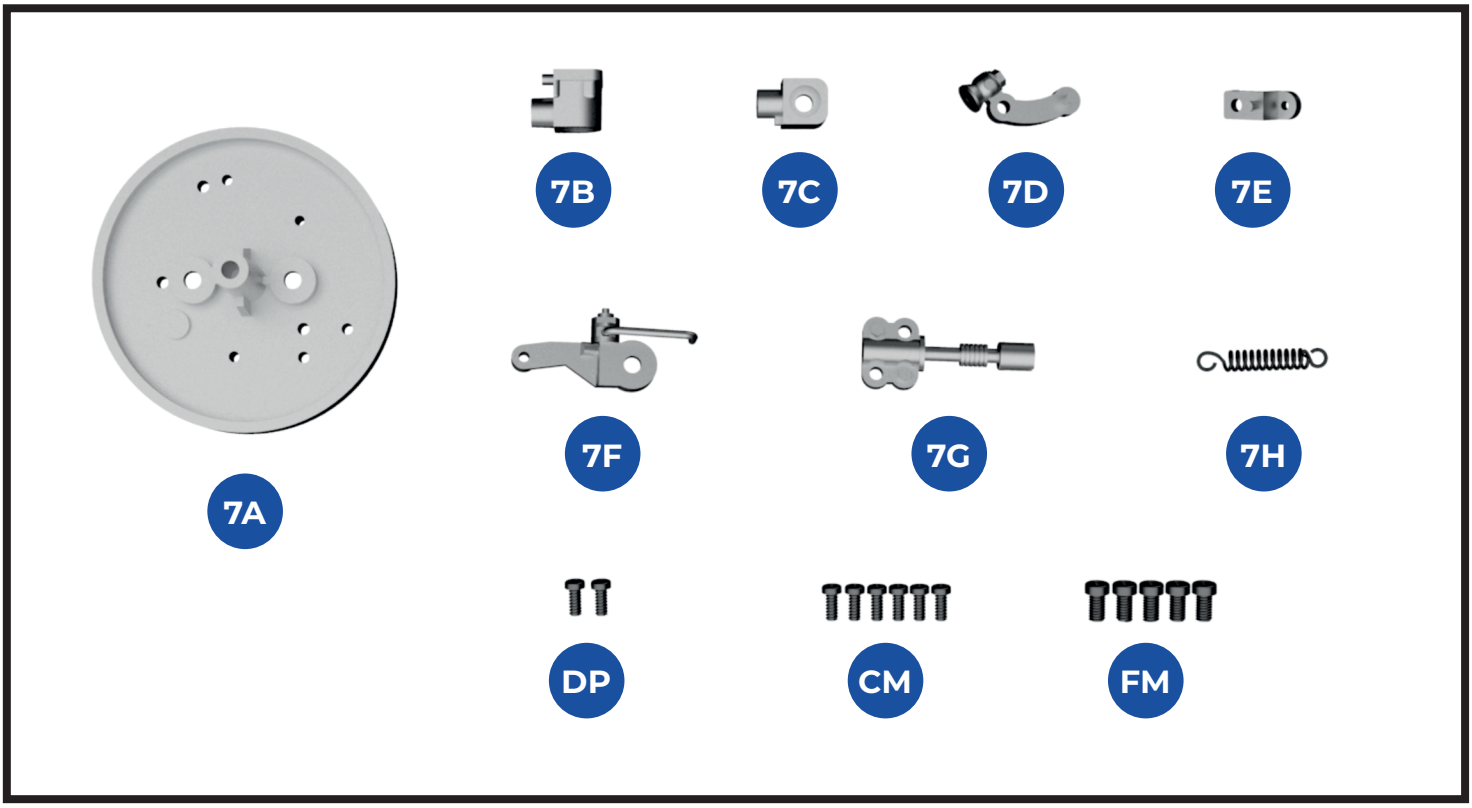

KEY TO PARTS SUPPLIED

- **7A** Brake disc (the side with a spindle is shown here)
- **7B** Lower hinge joint
- **7C** Upper hinge joint
- **7D** Steering arm
- **7E** Bracket
- **7F** Brake lever
- **7G** Brake cylinder
- **7H** Return spring
- **DP** 1.7 x 4mm (2 supplied)
- **CM** 1.7 x 4mm (6 supplied)
- **FM** 2.3 x 4mm (5 supplied)

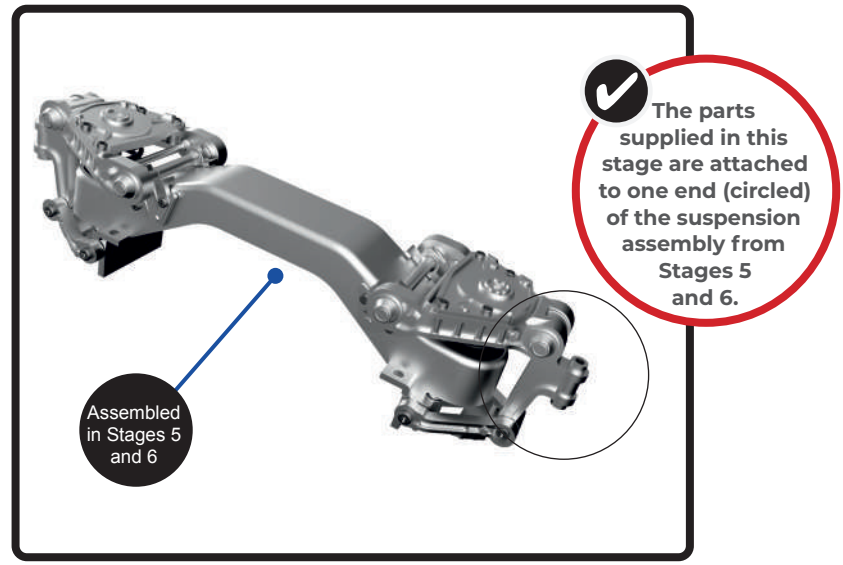

1

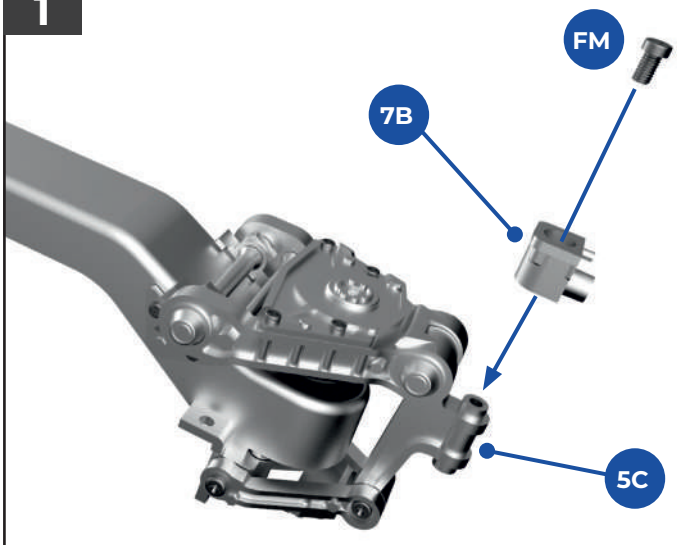

1 Take the suspension arm assembled in Stages 5 and 6 and check you have it the right way round, as shown. Take the lower hinge joint (**7B**) and fit it into one end of the turn axle link (**5C**, fitted to the suspension arm in Stage 5) and secure with an **FM** screw. Do not overtighten the screw as hinge joint (**7B**) swivels about the axle link (**5C**).

2

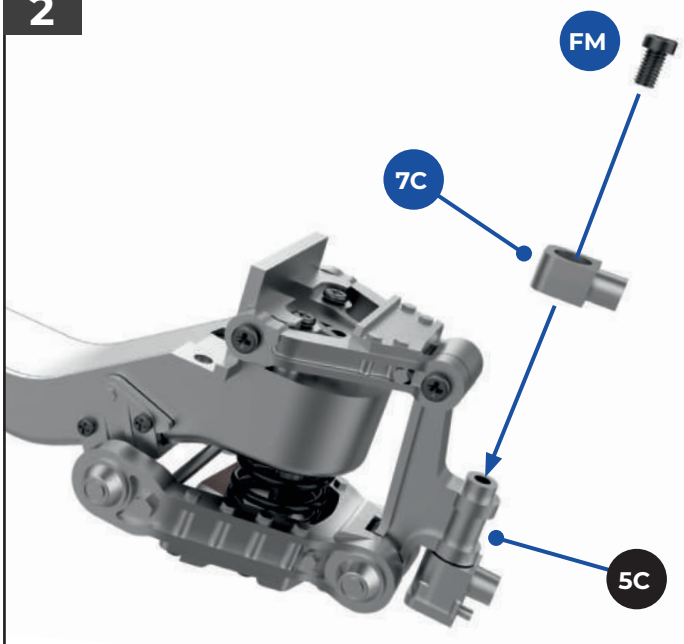

2 Turn the suspension arm over and fit the upper hinge joint (**7C**) to the other end of the axle link **5C**. Secure with an **FM** screw. Again, do not overtighten the screw so that part **7C** can swivel about the axle link.

3

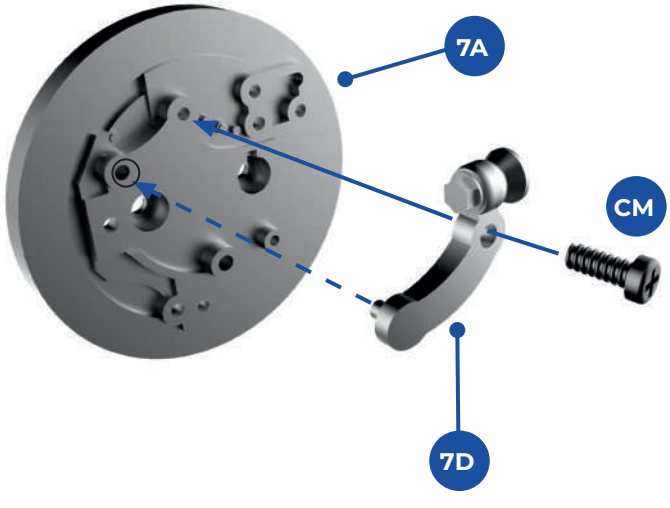

3 Take the brake disc (**7A**) and check the screw sockets and indents (on the side without the spindle). Take the steering arm (**7D**) and fit the peg on one end into the socket on the disc (circled). Secure the brake link with a **CM** screw.

4

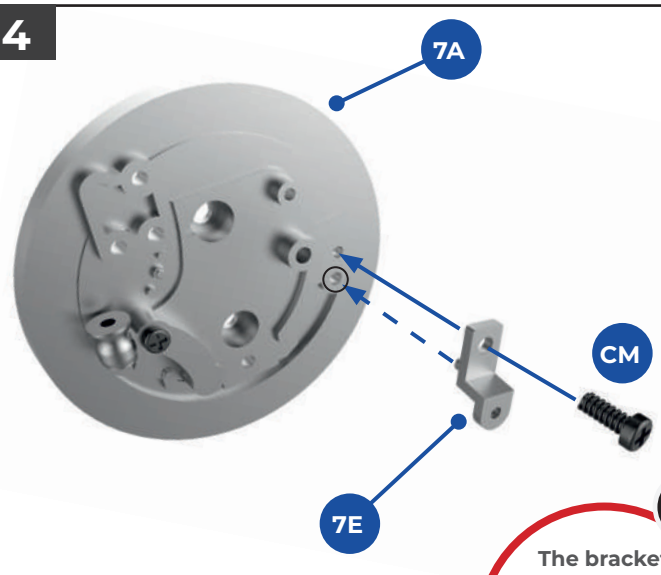

The bracket has one rounded end and one square end. Make sure you fit it the right way round.

4 Take the bracket (**7E**) and check you have it the right way round. Fit the peg on the bracket into the socket in the brake disc (circled) and secure the bracket with a **CM** screw. NOTE: We have rotated the view of the disc compared to the view shown in step 3.

5

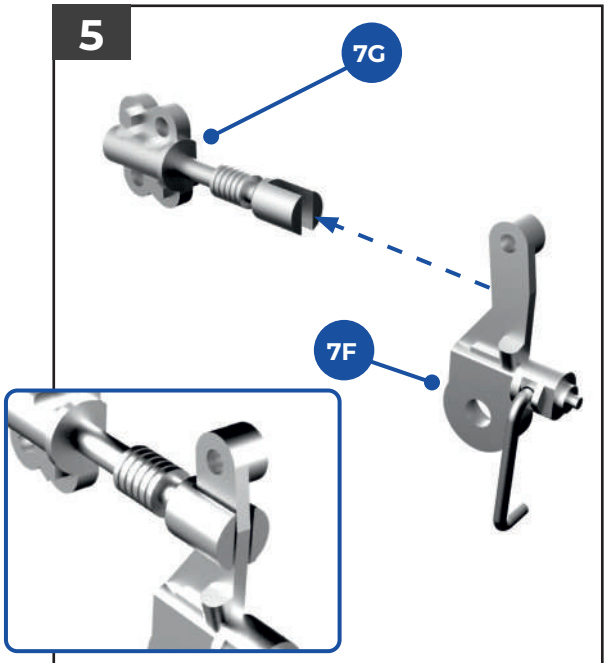

5 Take the brake cylinder (**7G**) and the brake lever (**7F**). Fit the flat arm of the lever into the slot in the cylinder as shown. (see detail, inset).

6

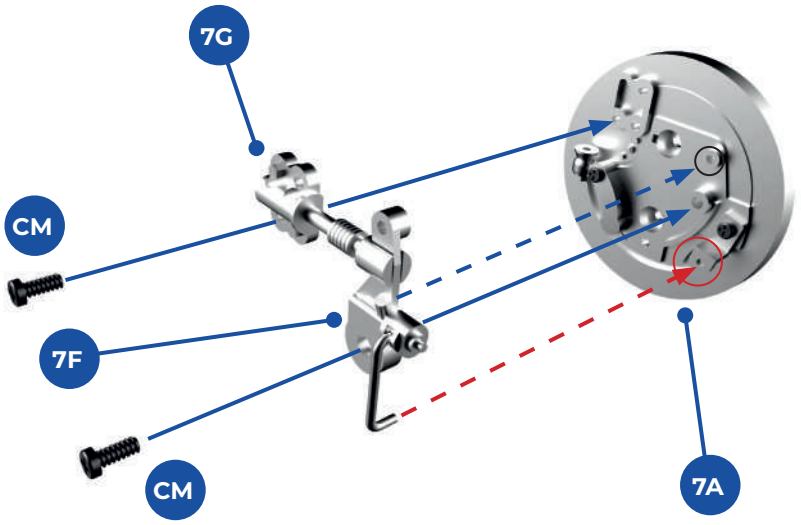

6 The next step is to fit the cylinder and lever assembly from step 5 to the disc (**7A**). There is a peg on the back of part **7F** that locates into a hole in the disc (circled). There is also a similar locating peg on the back of part **7G**. The arm on part **7F** locates in the hole in the rounded end of the bracket (circled in red). Secure the two parts with two **CM** screws, through the lower holes in the parts, as shown.

7

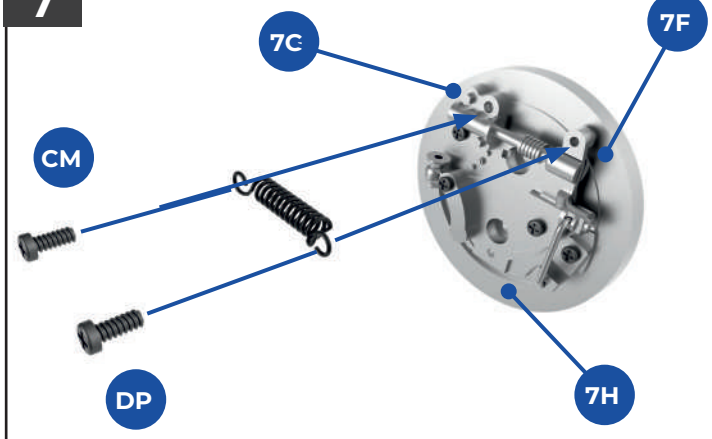

7 Position the return spring (**7H**) against the two large holes at the top of parts **7G** and **7F**. Secure the return spring using a **CM** screw on the left and a **DP** screw on the right. NOTE: The fixing points at the ends of the spring are raised so that when it is fitted correctly the body of the spring is close to the brake disc, rather than being raised away from it (see inset).

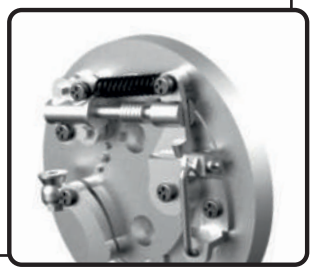

8

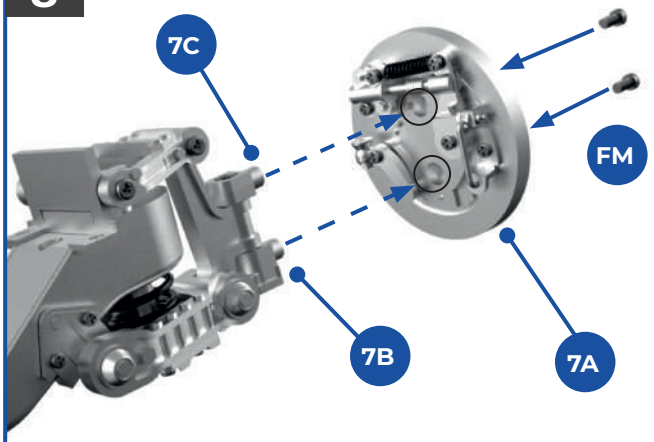

8 Attach the disc assembly to the suspension arm. First, fit the pegs on the hinge joints (**7B** and **7C**) into the holes in the disc (circled). Secure the disc in place from the other side, using two **FM** screws, which go through the holes in the disc into the hinge joints.

Before securing the disc in place, check that you have the suspension arm and disc in the orientation shown above.

Assembly guide

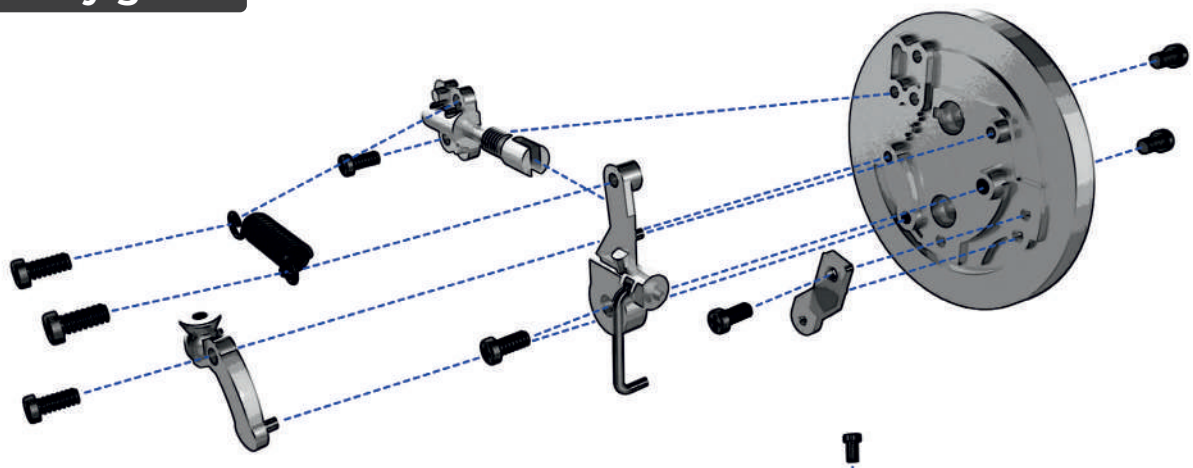

The brake disc assembly (above) is fitted to the hinge joints on one end of the suspension arm (below).

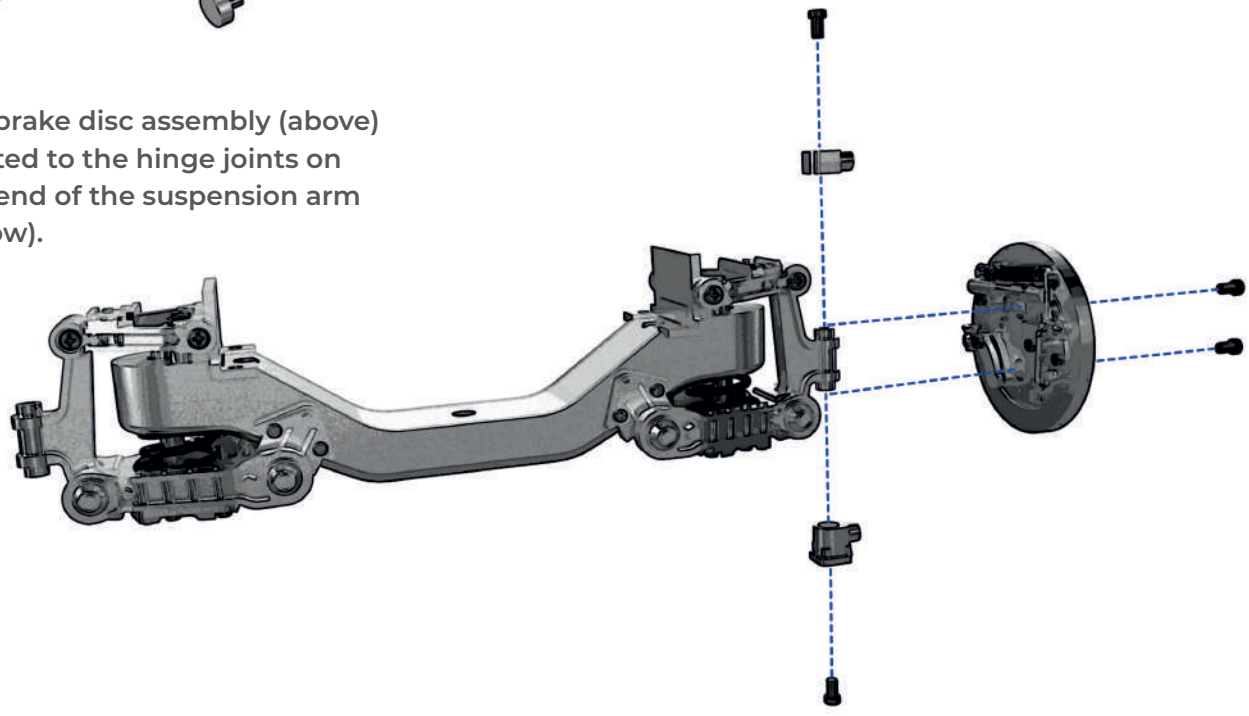

Finished views

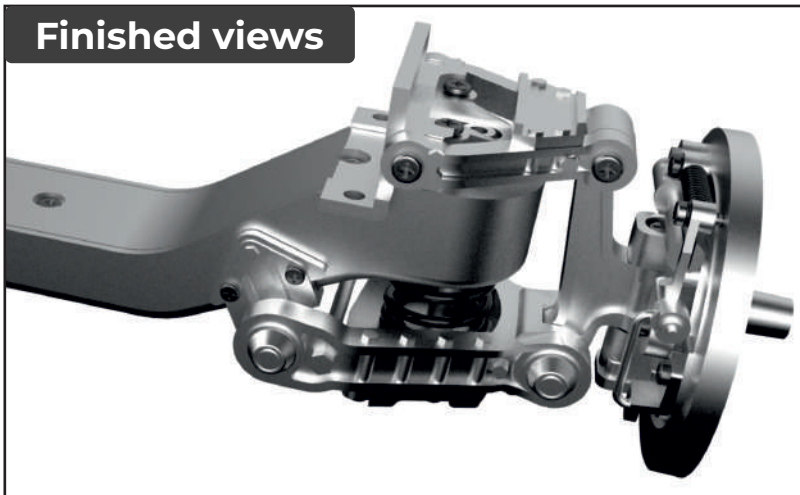

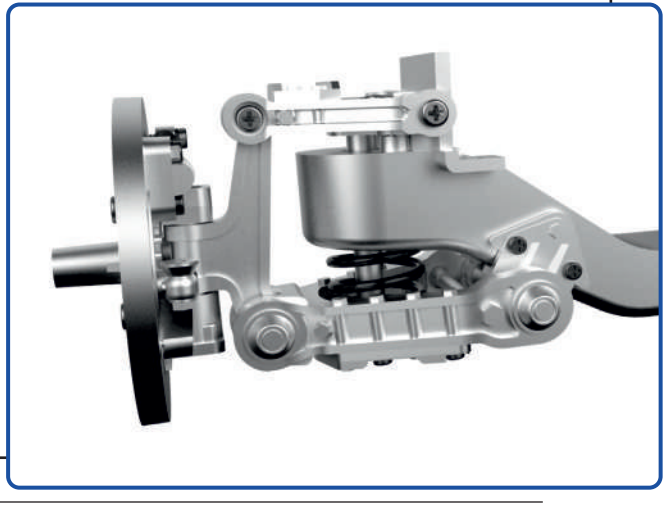

STAGE 08

FITTING THE FIRST TYRE AND WHEEL

In this stage we give instructions for fitting the tyre to the wheel rim. The wheel is fitted to the first brake disc and then the nut guard, hub cover and logo are attached.

KEY TO PARTS SUPPLIED

8A Tyre
8B Hub cover
8C Logo
8D Nut guard
8E Wheel rim
8F Washer
JM 1.2 x 3mm (x4)
IM 2.6 x 5mm (x2)

The parts supplied with this issue enable you to complete the first wheel, complete with hub cap and logo.

1

You may find it easier to soften the tyre by gently warming it with a hair dryer. This means that no water will get inside the tyre.

1 Soften the tyre (**8A**) in warm water and dry it carefully. Fit the wheel rim (**8E**) into the tyre, ensuring that the outer edges of the rim are properly enclosed in the tyre.

2

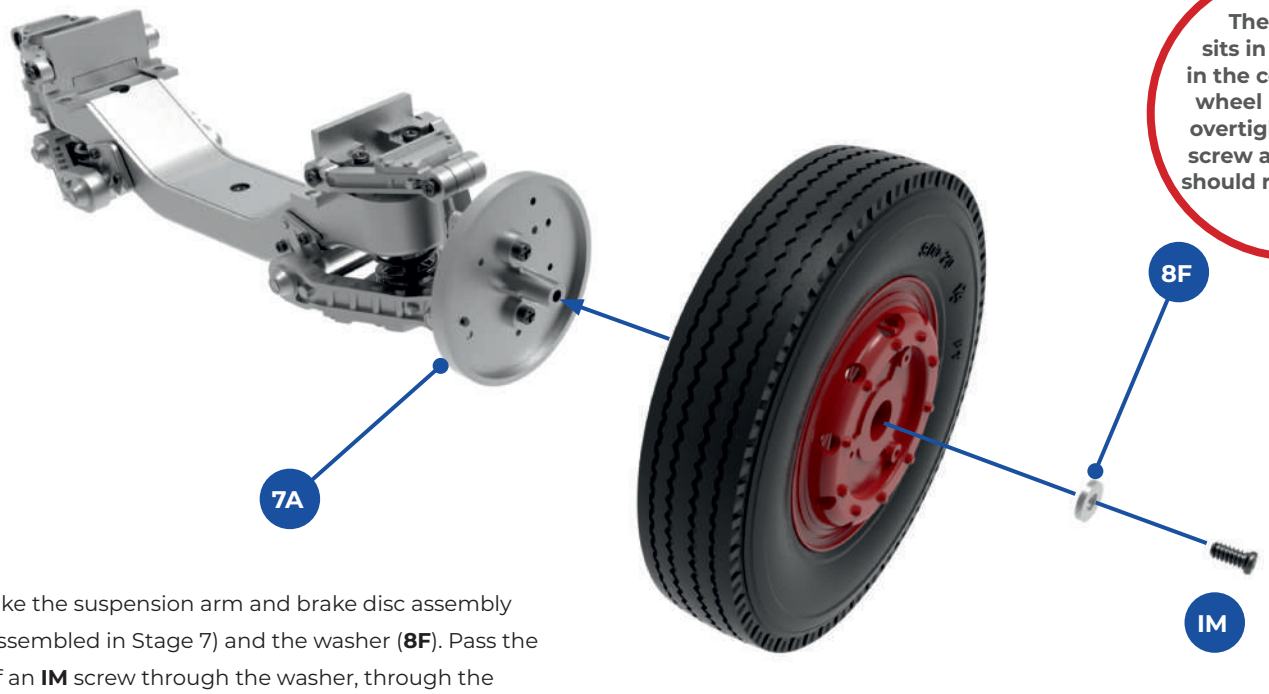

The washer sits in the recess in the centre of the wheel rim. Do not overtighten the IM screw as the wheel should rotate freely.

2 Take the suspension arm and brake disc assembly (assembled in Stage 7) and the washer (**8F**). Pass the end of an **IM** screw through the washer, through the centre of the wheel rim and into the spindle of the brake disc (**7A**). Tighten the screw to hold the wheel in place.

3

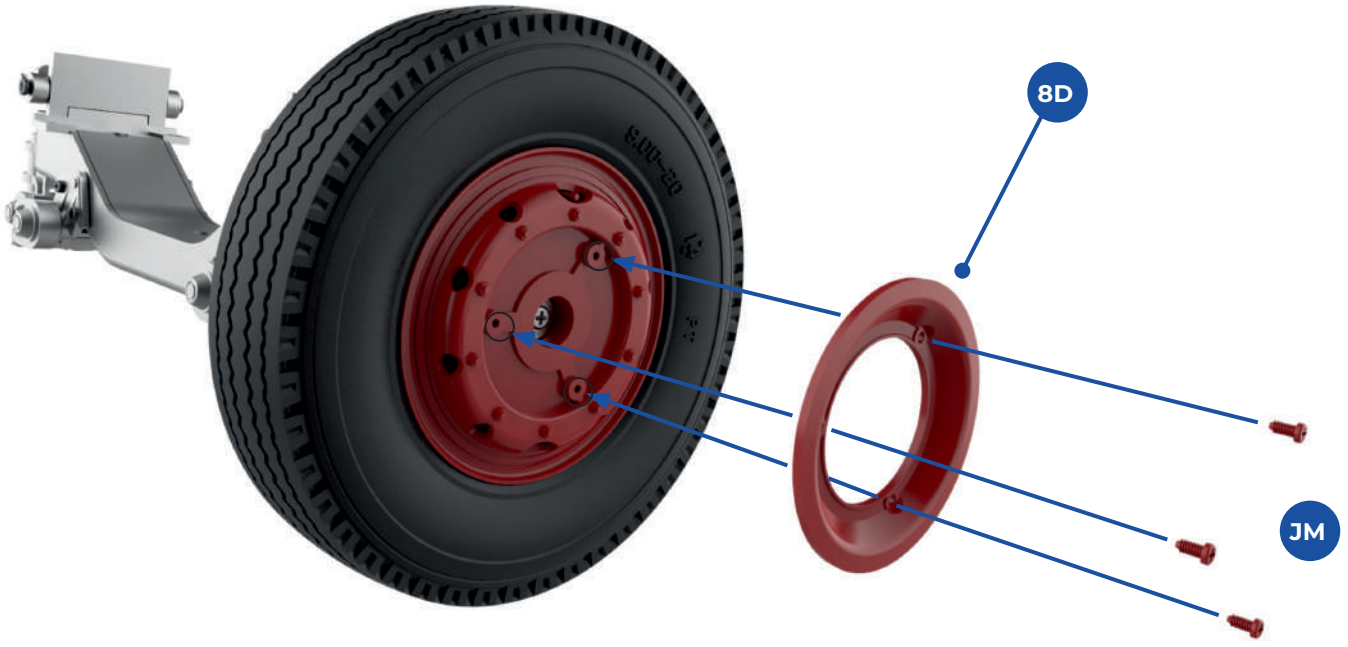

3 Take the nut guard (**8D**) and fix it to the wheel rim using three **JM** screws. NOTE: The screws fit into the three holes in the inner part of the rim (circled).

4

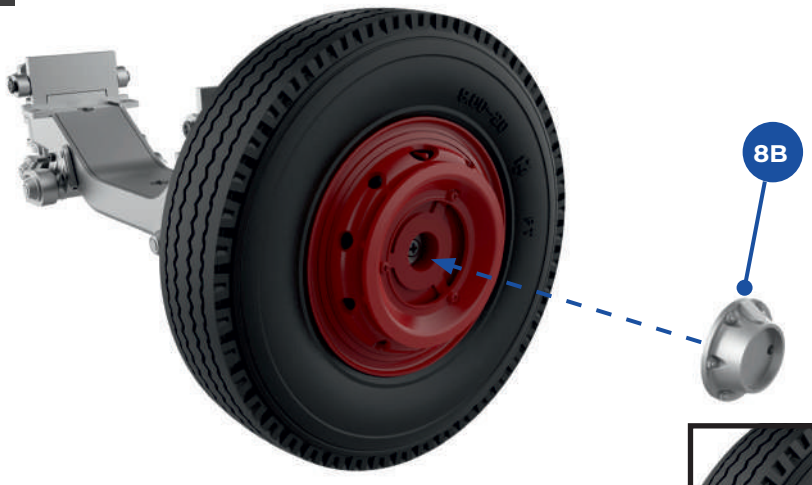

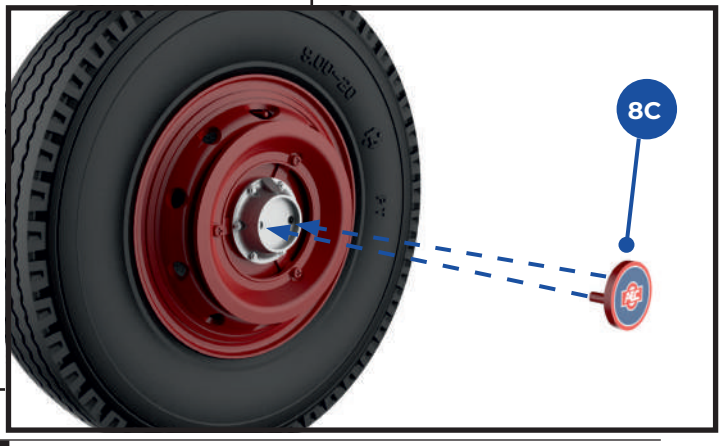

4 Fit the hub cover (**8B**) to the centre of the wheel: it is a push-fit connection. Fit the logo (**8C**) to the centre of the hub cover, ensuring that both prongs fit into the holes in the hub cover (inset). Again, it is a push-fit connection.

Assembly guide

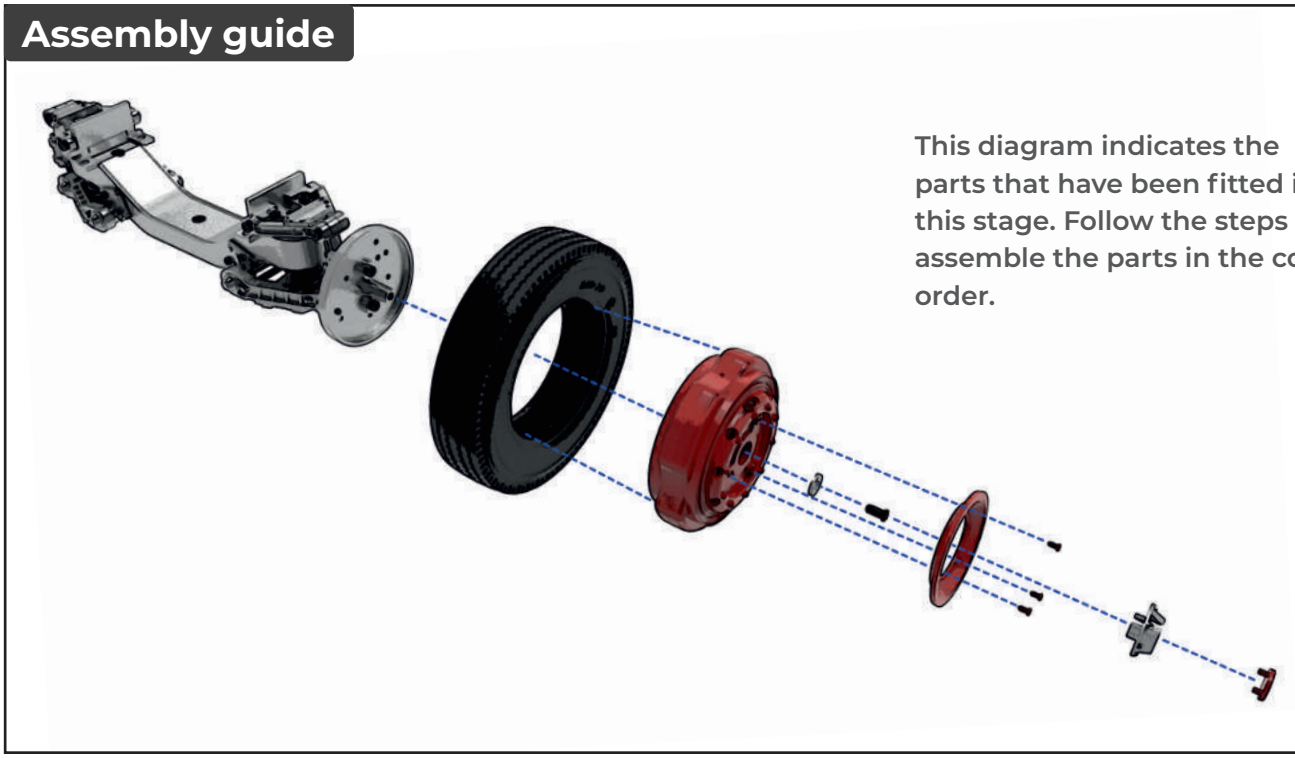

This diagram indicates the parts that have been fitted in this stage. Follow the steps to assemble the parts in the correct order.

Finished views

One wheel is now fitted to the brake disc and suspension arm.

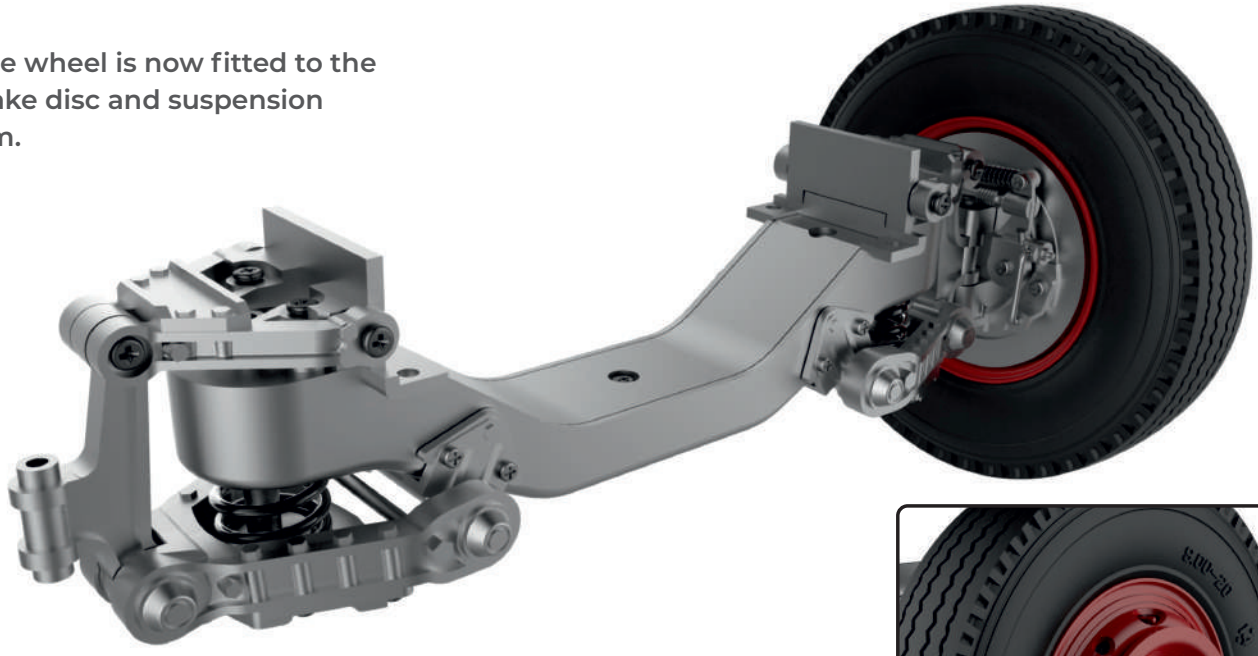

STAGE 09

FITTING THE SECOND BRAKE DISC

Continuing work on the suspension arm, we fit the second brake disk to the other end of the arm. Note that not all pieces are the same as those supplied in stage 7 – many are a mirror image.

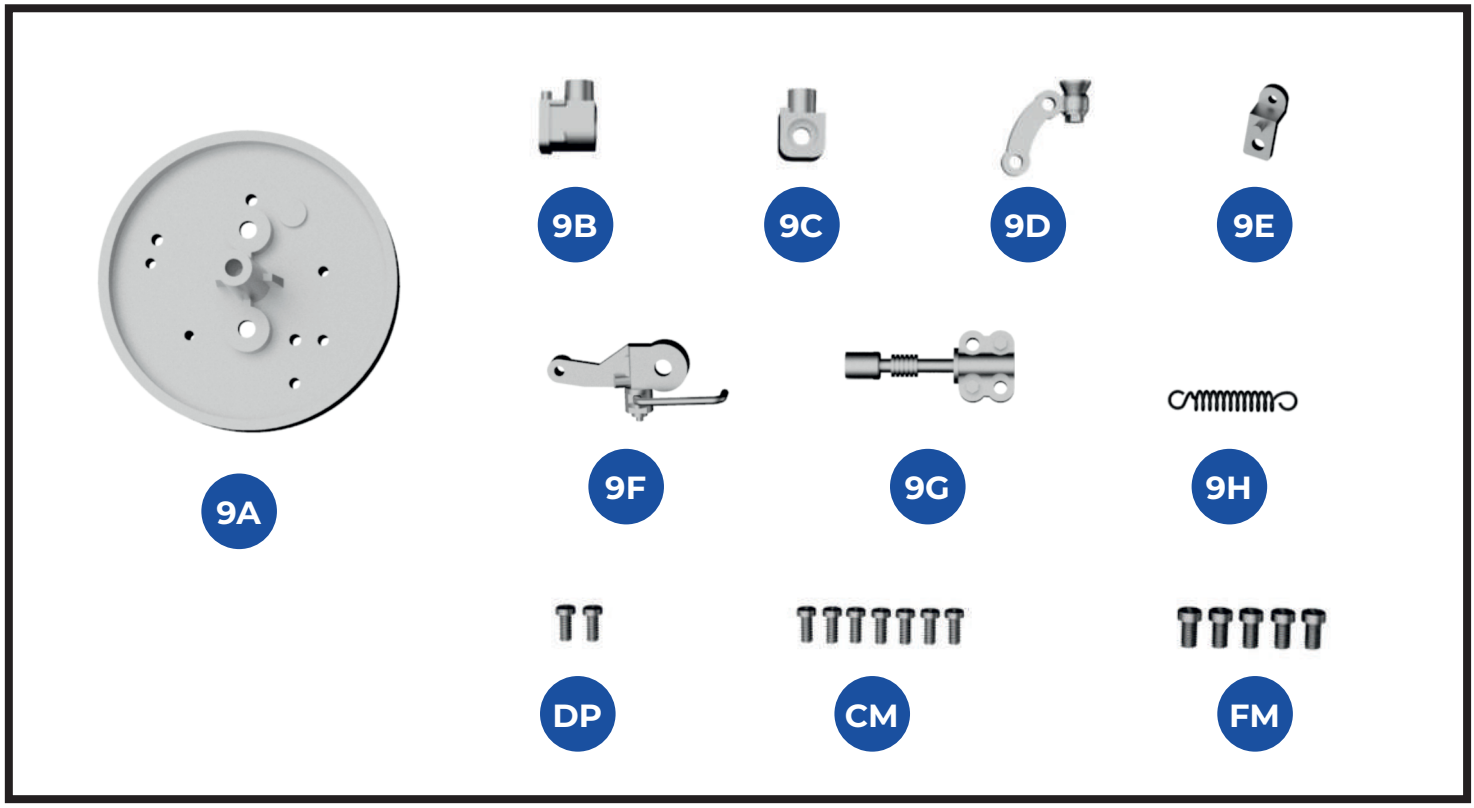

KEY TO PARTS SUPPLIED

9A Brake disc
(the side with a spindle is shown here)
9B Lower hinge joint
9C Upper hinge joint
9D Steering arm
9E Bracket
9F Brake lever
9G Brake cylinder
9H Return spring
DP 1.7 x 4mm (2 supplied)
CM 1.7 x 4mm (7 supplied)
FM 2.3 x 4mm (5 supplied)

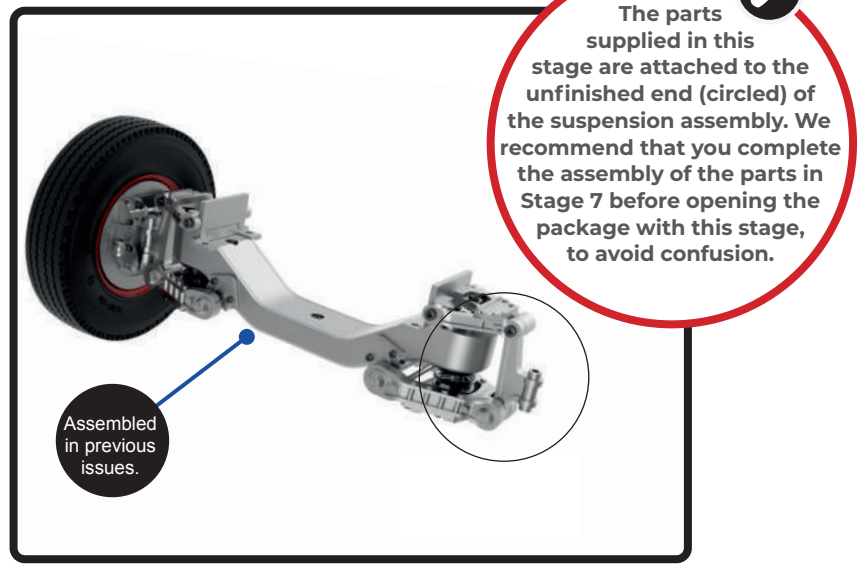

The parts supplied in this stage are attached to the unfinished end (circled) of the suspension assembly. We recommend that you complete the assembly of the parts in Stage 7 before opening the package with this stage, to avoid confusion.

1

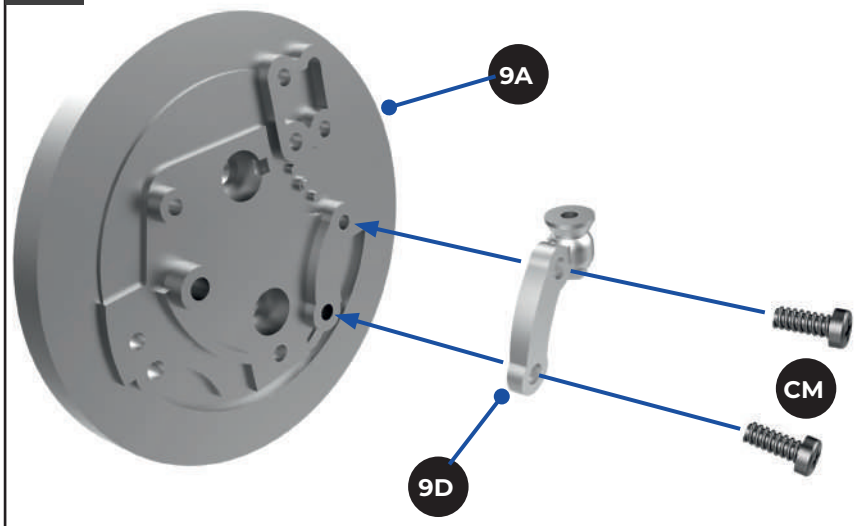

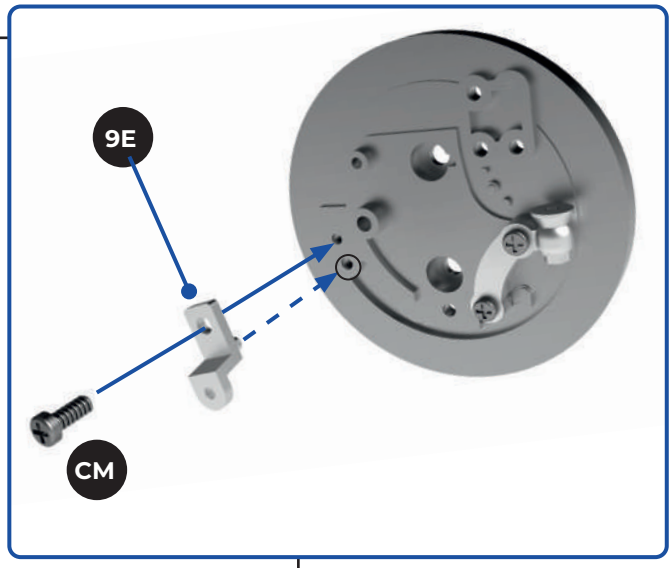

1 Take the brake disc (**9A**) and check the screw sockets and indents (on the side without the spindle). Take the steering arm (**9D**) and fix it to the corresponding holes on the disc (circled) using two **CM** screws. Take the bracket (**9E**) and check you have it the right way round. Fit the peg on the bracket into the socket in the brake disc (circled, inset) and secure the bracket with a **CM** screw.

The bracket has one rounded end and one square end. Make sure you fit it the right way round.

3

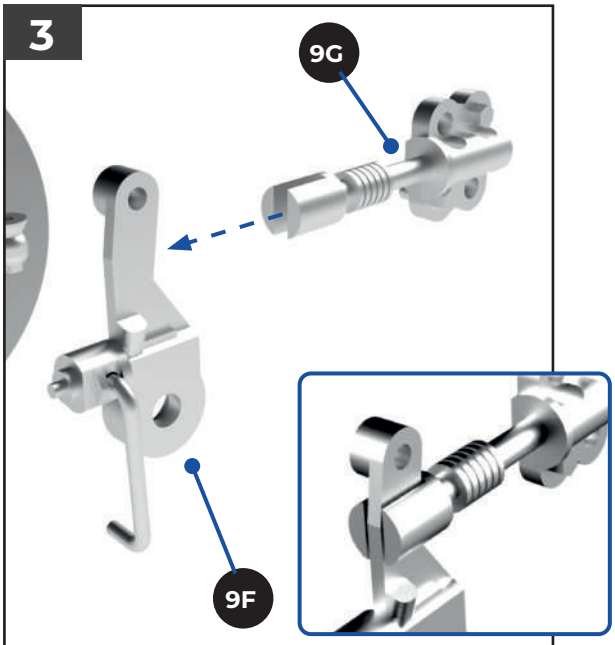

3 Take the brake cylinder (**9G**) and the brake lever (**9F**). Fit the flat arm of the lever into the slot in the cylinder as shown. (see detail, inset).

4

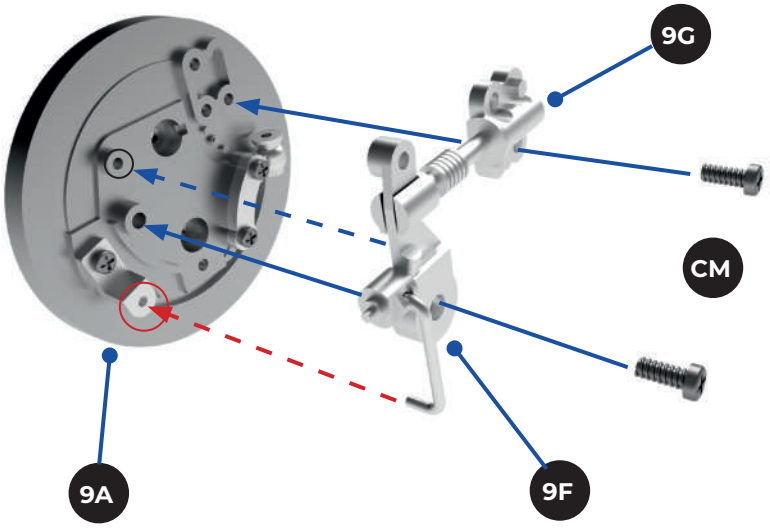

4 The next step is to fit the cylinder and lever assembly from step 3 to the disc (**9A**). There is a peg on the back of part **9F** that locates into a hole in the disc (circled). There is a similar locating peg on the back of part **9G**. The arm on part **9F** locates in the hole in the rounded end of the bracket (circled in red). Secure the two parts with two **CM** screws, through the lower holes in the parts, as shown.

5

5 Position the return spring (**9H**) against the two large holes at the top of parts **9G** and **9F**. Secure the return spring using a **CM** screw on the left and a **DP** screw on the right.

Ensure that you have the spring the right way round, so that the body of the spring is close to the brake disc.

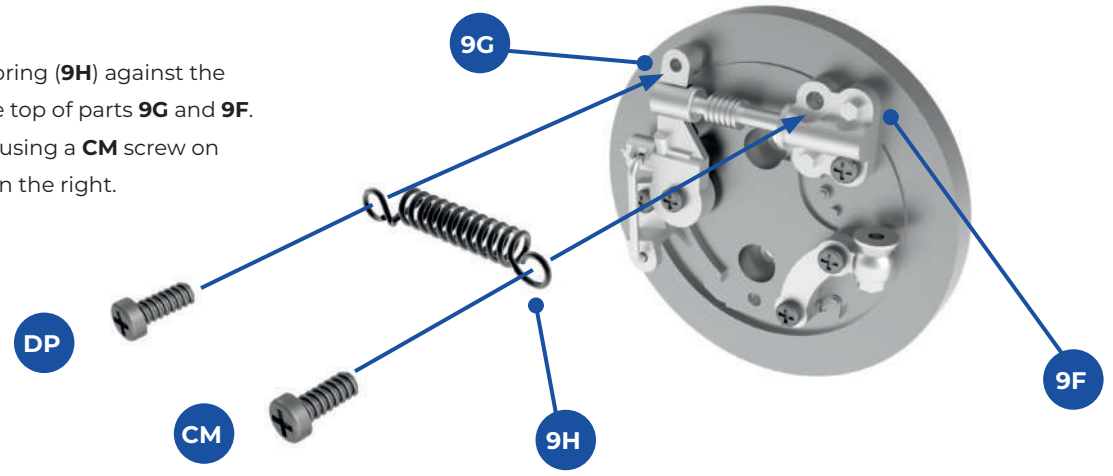

6

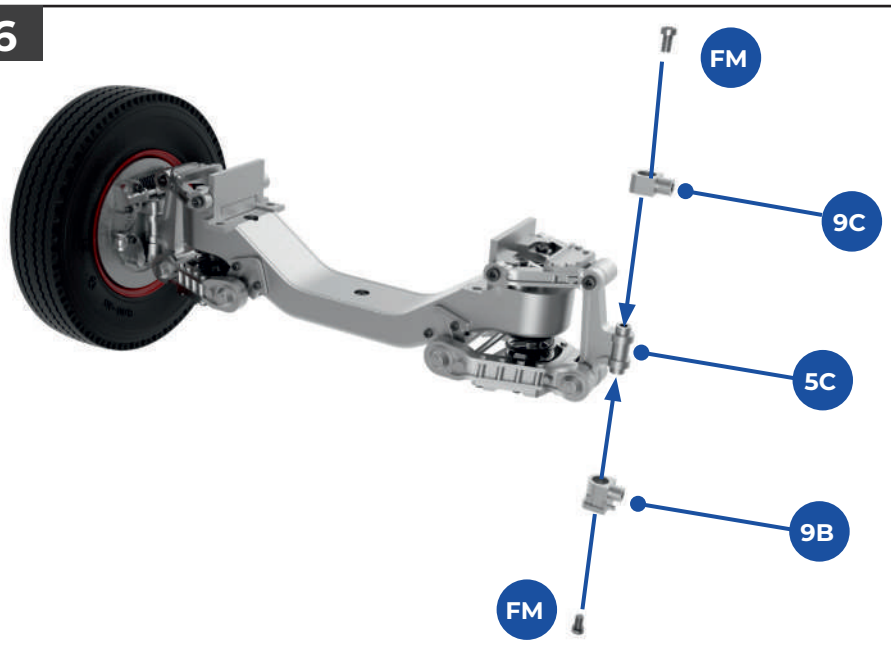

6 Take the suspension arm assembled in Stages 5 and 6 and check you have it the right way round, as shown. Take the lower hinge joint (**9B**) and fit it into one end of the turn axle link (**5C**, fitted to the suspension arm in Stage 5) and secure with an **FM** screw. Fit the upper hinge joint (**9C**) to the other end of part **5C** and secure with an **FM** screw. Take care not to over-tighten the screws as the joints swivel about the axle link **5C**.

7

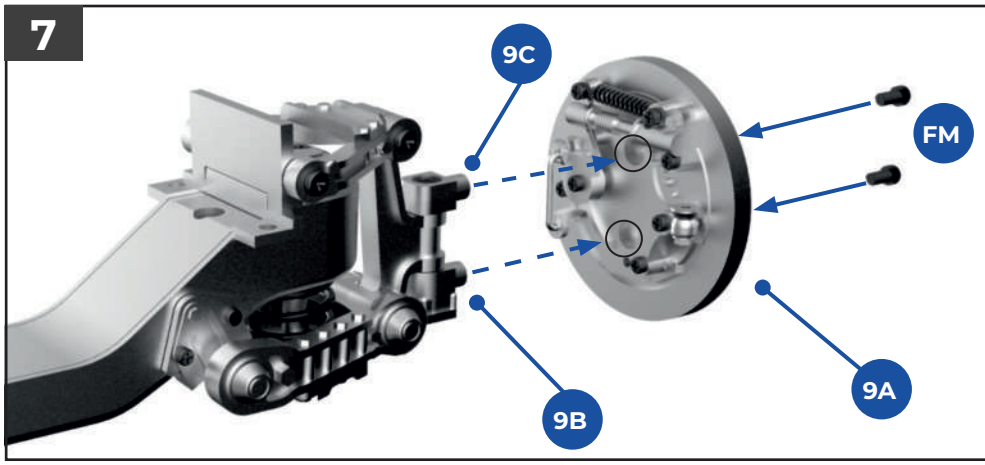

7 Attach the disc assembly to the suspension arm by fitting the pegs on the hinge joints (**9B** and **9C**) into the holes in the disc (circled). Secure the disc in place from the other side, using two **FM** screws, which go through the holes in the disc into the hinge joints.

Assembly guide

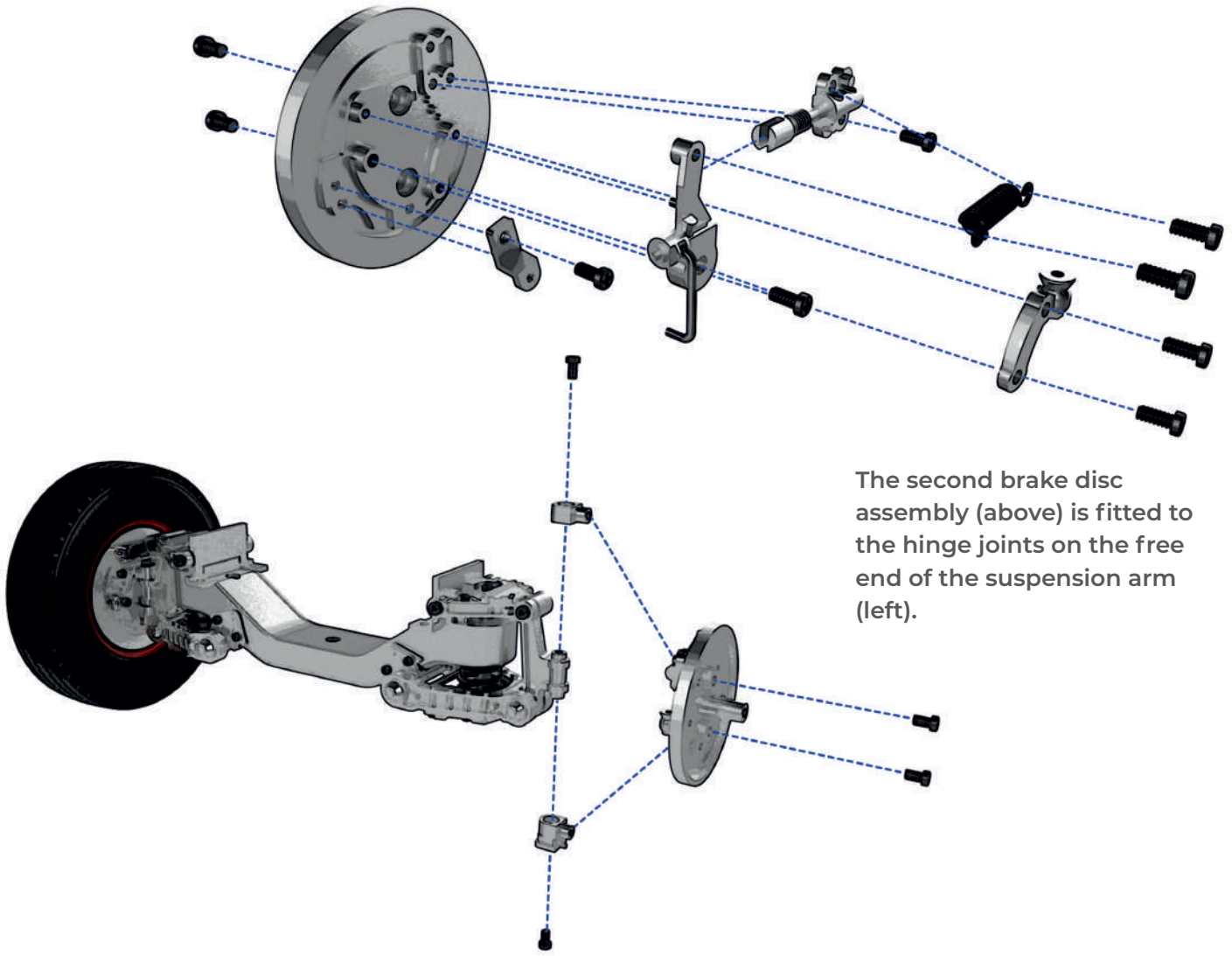

The second brake disc assembly (above) is fitted to the hinge joints on the free end of the suspension arm (left).

Finished view

STAGE 10

ASSEMBLING AND FITTING THE SECOND WHEEL

To complete this section of work on the suspension, we assemble the second wheel and fit it to the brake disc on the end of the suspension arm.

KEY TO PARTS SUPPLIED

10A	Tyre
10B	Hub cover
10C	Logo
10D	Nut guard
10E	Wheel rim
10F	Washer
JM	1.2 x 3mm (x4)
IM	2.6 x 5mm (x2)

The parts supplied in this issue are the same as those supplied with Stage 8 and enable you to assemble and fit the second front wheel, complete with hub cap and logo.

1

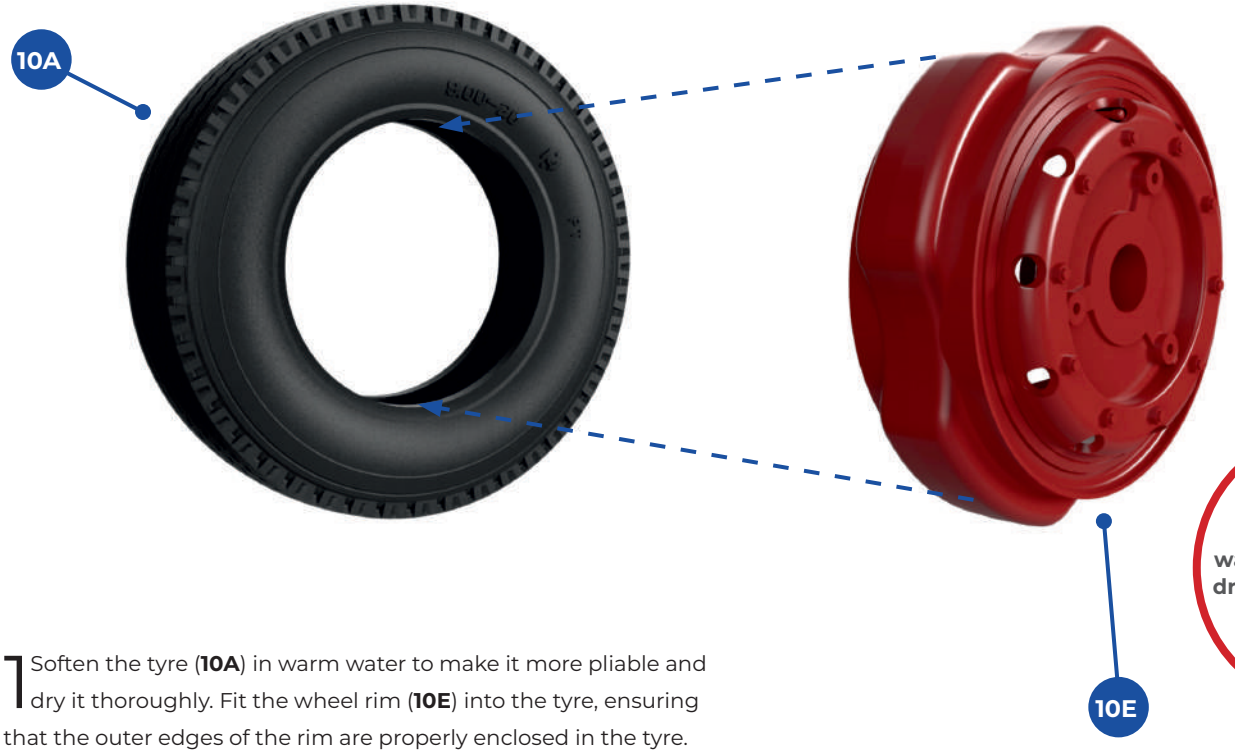

You may find it easier to soften the tyre by gently warming it with a hair dryer. This means that no water will get inside the tyre.

1 Soften the tyre (**10A**) in warm water to make it more pliable and dry it thoroughly. Fit the wheel rim (**10E**) into the tyre, ensuring that the outer edges of the rim are properly enclosed in the tyre.

2

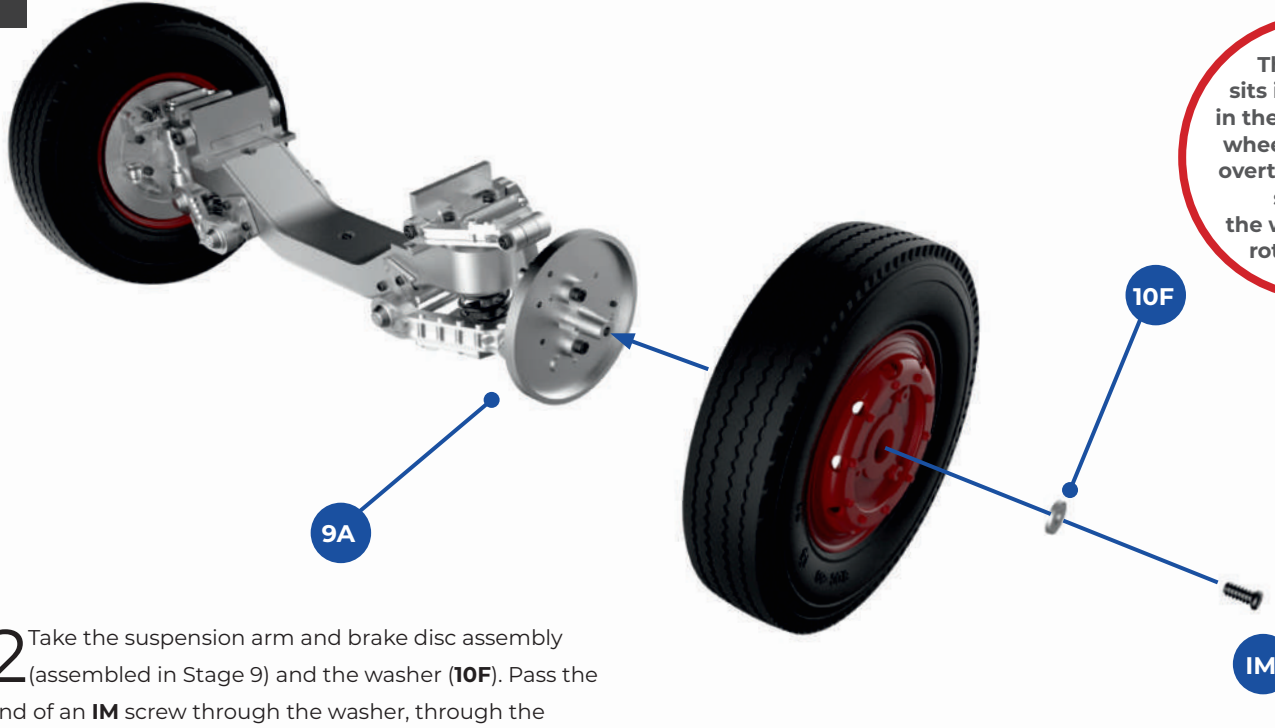

The washer sits in the recess in the centre of the wheel rim. Do not overtighten the IM screw as the wheel should rotate freely.

2 Take the suspension arm and brake disc assembly (assembled in Stage 9) and the washer (**10F**). Pass the end of an **IM** screw through the washer, through the centre of the wheel rim and into the spindle of the brake disc (**9A**). Tighten the screw to hold the wheel in place.

3

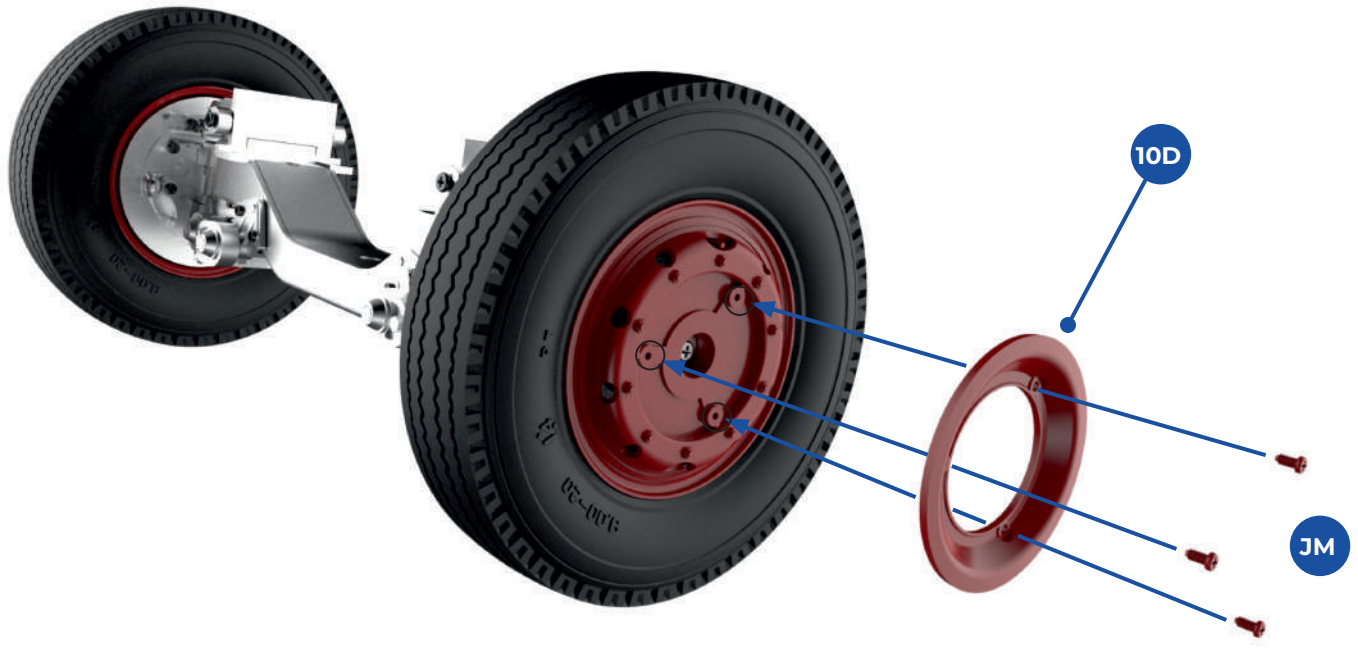

3 Take the nut guard (**10D**) and fix it to the wheel rim using three **JM** screws. NOTE: The screws fit into the three holes in the inner part of the rim (circled).

4

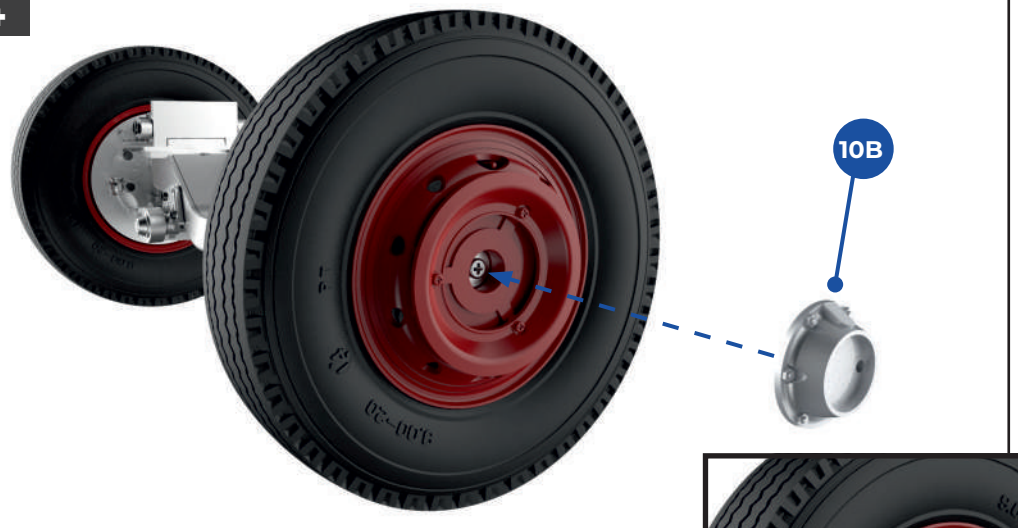

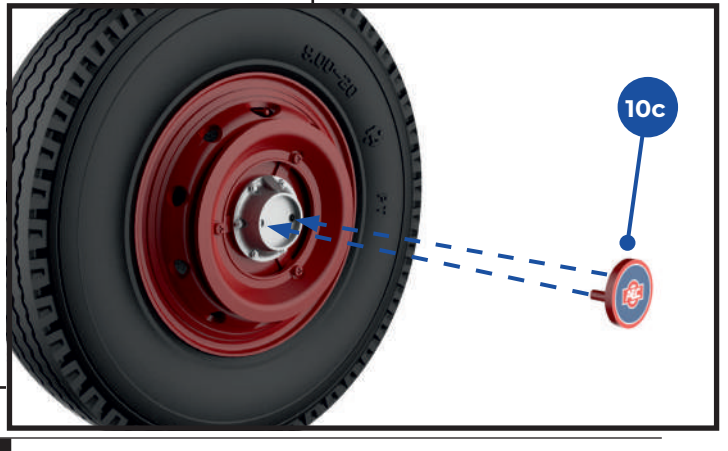

4 Fit the hub cover (**10B**) to the centre of the wheel: it is a push-fit connection. Fit the logo (**10C**) to the centre of the hub cover, ensuring that both prongs fit into the holes in the hub cover (inset). Again, it is a push-fit connection.

Assembly guide

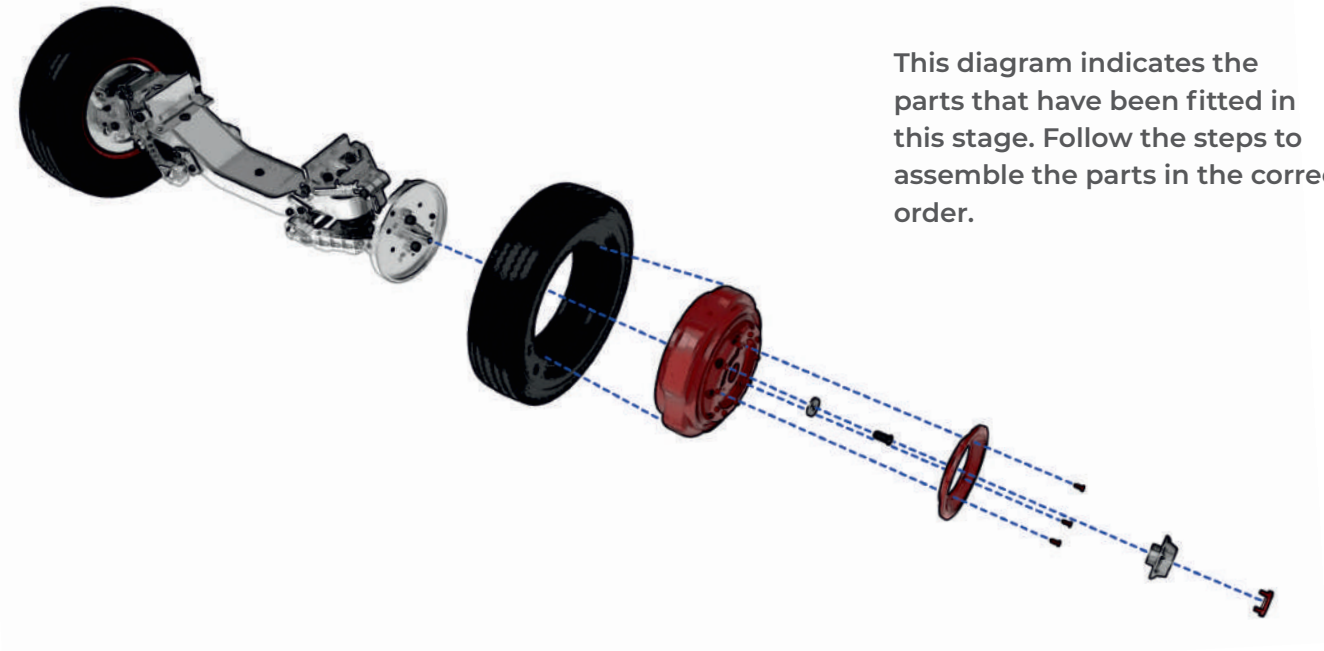

This diagram indicates the parts that have been fitted in this stage. Follow the steps to assemble the parts in the correct order.

Finished views

Both wheels are now fitted to the brake discs and suspension arm.